CITY OF LAKEWOOD
PERMIT PROCESS ASSISTANCE HANDOUT

Public Works - Permits – Civic Center North – 480 S Allison Pkwy – 303.987.7500

RESIDENTIAL PATIO COVERS & CARPORTS

This handout is only applicable to a residential carport or patio cover on a single-family lot. A building permit is required for any carport or patio cover regardless of size.

Printable copies of permit applications and contractor registration applications are available at www.lakewood.org or you may pick up copies at the address above.

Contractors and Homeowners as General Contractors:

- Homeowners may obtain the building permit for a carport or patio cover on their own single-family lot.
- Any person hired to perform work must have the required City of Lakewood contractor registration to do work within the city limits.

Submittal Requirements:

- Your project must comply with the required setbacks for your lot and structure location. Please check with the Planner-of-the-Day at 303-987-7571 or e-mail at POD@lakewood.org to verify your proposed structure meets all setback and location requirements.
- Provide a completed permit application.
- Provide two complete sets of the following plans:
    1. Plot Plan drawn to 1" = 30' or larger standard engineering scale. See page 2 of this handout for an example of the required plot plan.
        - You may draw a plot plan or you may use an Improvement Location Certificate (ILC) as your Plot Plan submittal. Make a copy of the ILC and add the required information. Draw the proposed carport or patio cover structure on the copy of the ILC using the same scale as the original.
        - Include north arrow and scale used.
        - Provide the property address and names of all adjacent streets.
        - Show all property lines and easements with dimensions.
        - Show footprint of existing home and new carport or patio cover.
        - Show all existing accessory buildings and label type and dimensions (e.g. 10' x 12' shed).
        - Show all walks, drives and patios.
        - Provide dimensions on all sides from the new carport or patio cover to property lines and other structures on the lot.
    2. Provide the carport or patio cover framing plan drawn to ¼" = 1' or larger standard scale.
        - Show dimensions of carport or patio cover and provide north arrow.
        - Truss shop drawings that bear the seal and signature of a registered Colorado P.E. must be provided when factory built trusses are being used rather than rafter systems.
        - Indicate if the carport or patio cover is to be wired in any manner. Indicate the location of lights, switches and outlets, and the power source from the primary electrical panel
    3. Building Section
        - Please see the attached structure details. Select the detail(s) that most resemble the proposed structure and include the required information as indicated on the examples provided in this handout.
        - Use the rafter table on page 2 to select the appropriate rafter size and spacing for your project.
        - Indicate the spacing, size, and depth of your support piers. Columns cannot be supported on a slab or a thickened edge slab. See additional information on page 3.
        - Indicate the height from the slab or floor to the bottom of the support beam and label the material types and size of all posts, rafters, beams and ledgers.
        - Indicate the attachment methods for posts, beams, ledgers, & rafters. Show slope of roof surface (e.g. 4:12 slope), and roof covering material to be used.

We are happy you are building in Lakewood and we want to provide whatever information you require. Please call 303.987.7500 with any questions.

RAFTER SPAN TABLE

Rafters	HF #2	DF-L #2
2x6 @ 24”	09’ 07”	09’ 9”
2x6 @ 16”	11’ 05”	11’ 11”
2x6 @ 12”	12’ 07”	13’ 06”
2x8 @ 24”	12’ 02”	12’ 04”
2x8 @ 16”	14’ 11”	15’ 01”
2x8 @ 12”	16’ 07”	17’ 05”
2x10 @ 24”	14’ 10”	15’ 01”
2x10 @ 16”	18’ 02”	18’ 05”
2x10 @ 12”	21’ 00”	21’ 04”
2x12 @ 24”	17’ 03”	17’ 06”
2x12 @ 16”	21’ 01”	21’ 05”
2x12 @ 12”	24’ 04”	24’ 08”

- Roofs are to be designed for a minimum 30 psf live load with a nominal 10 psf dead load (40 psf total load
- A 15 psf dead load (45 psf total load) and a deflection of L/240 are required for roofs having a slope of less than 4:12.
- Engineered rafter systems such as Truss or I joist must be designed per the manufacture’s specifications and stamped and signed by a registered Colorado Professional Engineer.

SAMPLE PLOT PLAN

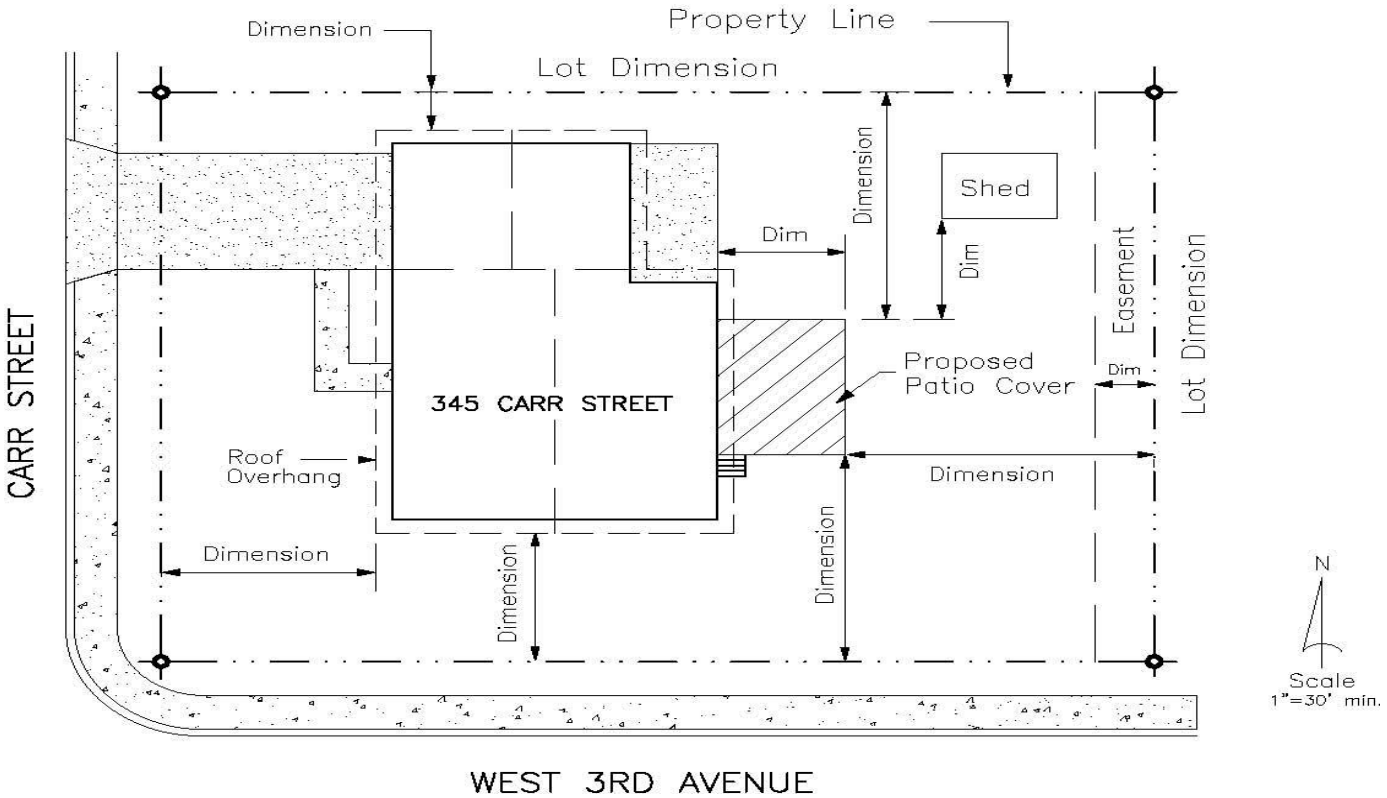

General Information:

Structural:

- The minimum structural design load for Lakewood is 30-psf live load (snow) and 10-psf dead load.
- Patio cover and carport columns must be supported on piers extending below frost line. A minimum size of 8" diameter pier for 4x4 posts and 10" diameter pier for 6x6 posts with a minimum depth of 36" deep below ground is required.
- Redwood or pressure treated wood must be used for posts (columns) unless they are supported by metal pedestals projecting at least 6" above the exposed earth and 1" above the floor.
- Unless the patio cover or carport is completely self-supporting, it must be attached to the main structure using one of four approved methods shown on the attached example section details.
  The patio cover or carport may not be attached to rafter tails, lookouts, or fascia without a site-specific engineered analysis and design.
- Patio covers or carports for mobile or modular homes must be freestanding.
- Ledger boards to support the rafters cannot be supported by or through brick or stone veneer.
- Rafter ledgers cannot be attached through roofing materials. All roof covering must be removed from the area under the new carport or patio cover ledger before installing the new ledger board.
- Truss clips must be used to attach the rafters to the support beam.
- Do not use screws to attach framing or hardware. Appropriate hanger nails must be used.

Roofing:

- Please see the "*Re-Roof and Roofing*" handout for roof covering information.

Patio Covers:

- Patio covers cannot be enclosed without a permit. Please see the *"Residential Patio Enclosures & Sunrooms"* handout for further information and requirements.
- Patio covers cannot exceed 12 feet in height at the low end.
- A minimum of 6' 8" of headroom is required under the bottom of the beam and 7' under the ceiling.
- Patio covers that are constructed of materials other than conventional wood framing must be an engineered design and bear the seal and signature of a registered Colorado P.E
- Patio covers constructed over decks must be supported directly over the deck supports, or;
  1. Be supported independently of the deck
  2. The design must bear the seal and signature of a registered Colorado P.E

Carports:

- Carports must remain open on at least 2 sides. Enclosure of more than two sides will be considered a garage and must meet the code requirements for a garage. No fire-separation is required between a residence and a carport.
- Walls enclosing carports must be supported on a continuous frost-protected foundation that is at least 36" deep below the ground or be totally unsupported by the slab.
- Carport floor must be non-combustible and sloped to allow drainage to one of the open sides.

We are happy you are building in Lakewood and we want to provide whatever information you require. Please call 303.987.7500 with any questions.

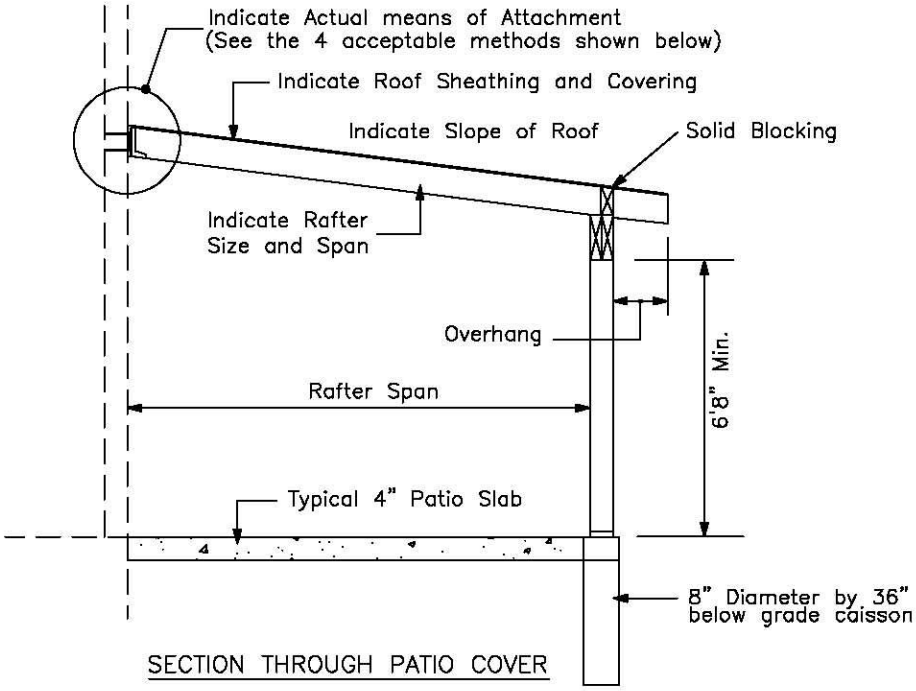

SECTION THROUGH PATIO COVER

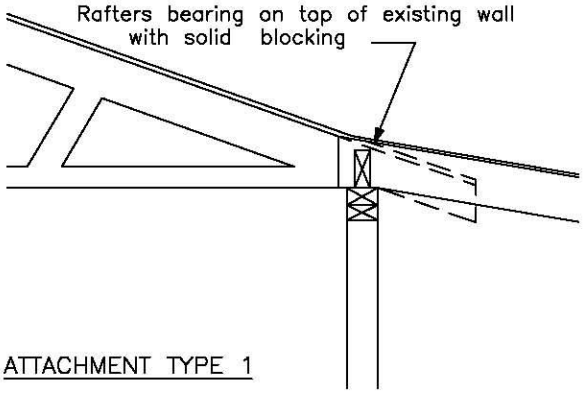

ATTACHMENT TYPE 1

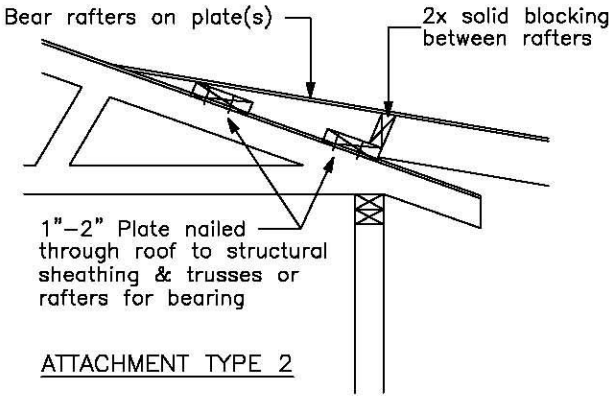

ATTACHMENT TYPE 2

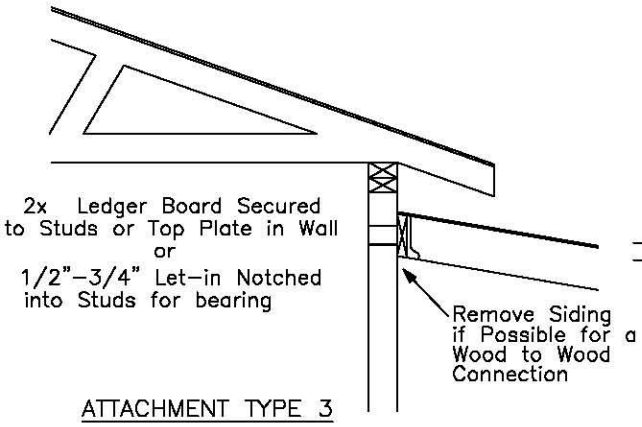

ATTACHMENT TYPE 3

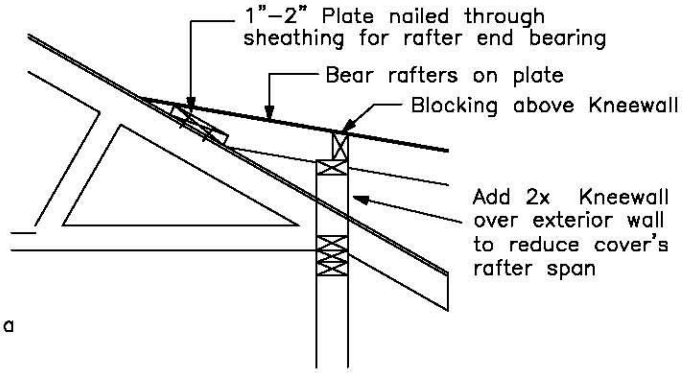

ATTACHMENT TYPE 4

Kneewall may bear on exterior wall top plate or on roof sheathing directly over the wall.