City of Lakewood

Traffic Signal Standards

2012

Sheet No.	Description
1	Title Sheet
2	General Traffic Signal Equiptment Installation Notes
3	Signal Pole and Mast Arms
4	Span Wire pole Installation
5	Pedestal Pole and Pedestrian Push-Button/Signage
6-7	Mast Arm Signal Pole Foundations
8	Controller Base and Cabinet
9	Signal Head Attachments
10	Pull Box Details
11	Pull Box (Special) Details
12	Detector Installations
13	Underground Power Schematic and Conduit Details
14	Typical Traffic Signal Plan

GENERAL NOTES

1. THE LAKEWOOD TRAFFIC ENGINEER'S SIGNATURE AFFIXED TO THE SIGNAL PLAN INDICATES THAT THE TRAFFIC ENGINEERING DIVISION HAS REVIEWED THE TRAFFIC SIGNAL PLAN AND FOUND IT IN GENERAL CONFORMANCE WITH THE CITY OF LAKEWOOD TRAFFIC SIGNAL SPECIFICATIONS AND TRAFFIC SIGNAL STANDARDS, SUBJECT TO APPROVED VARIANCES. THE CITY OF LAKEWOOD TRAFFIC ENGINEER THROUGH ACCEPTANCE OF THE SIGNAL PLAN ASSUMES NO RESPONSIBILITY, OTHER THAN STATED ABOVE, FOR THE COMPLETENESS AND/OR ACCURACY OF THE DOCUMENTS. THE CITY OF LAKEWOOD AND THE DESIGN ENGINEER UNDERSTAND THAT THE RESPONSIBILITY FOR THE ENGINEERING ADEQUACY OF THE FACILITIES DEPICTED IN THE DOCUMENT LIES SOLELY WITH THE COLORADO REGISTERED PROFESSIONAL ENGINEER WHOSE STAMP AND SIGNATURE IS AFFIXED TO THE TRAFFIC SIGNAL PLANS AND SPECIFICATIONS.

2. EXCEPT AS MODIFIED IN THE PLANS, ALL WORK SHALL BE IN ACCORDANCE WITH THE CITY OF LAKEWOOD TRAFFIC SIGNAL SPECIFICATIONS AND TRAFFIC SIGNAL STANDARDS AND THE GENERAL TRAFFIC SIGNAL EQUIPMENT INSTALLATION NOTES. (IN ADDITION TO THE GENERAL TRAFFIC SIGNAL EQUIPMENT INSTALLATION NOTES, THE DESIGNER/DEVELOPER SHOULD ALSO ATTACH ANY PROJECT–SPECIFIC TRAFFIC SIGNAL NOTES WHICH APPLY TO THE SPECIFIC PROJECT AND SPECIAL INSTALLATION REQUIREMENTS. THESE PROJECT–SPECIFIC NOTES SHOULD INCLUDE SPECIAL CONDITIONS, ADDITIONS AND DELETIONS AS SPECIFIED FOR THE PROJECT THAT MAY SUPPLEMENT OR CHANGE THE NOTES, CONDITIONS OR REQUIREMENTS LISTED IN THE GENERAL TRAFFIC SIGNAL EQUIPMENT INSTALLATION NOTES.)

3. THE CONTRACTOR SHALL CONTACT THE CITY OF LAKEWOOD TRAFFIC ENGINEERING MANAGER (303–987–7985) A MINIMUM OF 48 HOURS AND A MAXIMUM OF 96 HOURS PRIOR TO STARTING SIGNAL CONSTRUCTION.

4. POLES, CABINET, PULL BOXES AND DETECTOR LOCATIONS ARE APPROXIMATE AS SHOWN IN THE PLANS. EXACT LOCATIONS SHALL BE DETERMINED BY THE CITY OF LAKEWOOD TRAFFIC SIGNAL MAINTENANCE SUPERVISOR (303–987–7995) IN THE FIELD. TRAFFIC SIGNAL POLES AND MAST ARMS SHALL NOT BE ORDERED UNTIL THE EXACT LOCATION OF POLE BASES IS FIELD VERIFIED.

5. ALL EXISTING UTILITIES ARE APPROXIMATE. THE CONTRACTOR SHALL FIELD VERIFY THE EXACT LOCATION OF ALL EXISTING UTILITIES BEFORE COMMENCING WORK, AND AGREES TO BE FULLY RESPONSIBLE FOR ANY AND ALL DAMAGES THAT MAY OCCUR BY THE CONTRACTOR'S FAILURE TO EXACTLY LOCATE AND PRESERVE ANY AND ALL UTILITIES. POTHOLING FOR UTILITIES AT PROPOSED SIGNAL POLE LOCATIONS WILL BE REQUIRED.

6. THE CONTRACTOR SHALL CONTACT THE CITY'S TRAFFIC SIGNAL MAINTENANCE SUPERVISOR (303–987–7995) 48–HOURS IN ADVANCE TO DETERMINE WHICH EXISTING SIGNAL EQUIPMENT SHALL BE SALVAGED AND DELIVERED TO THE CITY'S TRAFFIC MAINTENANCE YARD AT 1060 QUAIL STREET. EXISTING EQUIPMENT DEEMED UNSALVAGEABLE BY THE CITY SHALL BE THE RESPONSIBILITY OF THE CONTRACTOR TO PROPERLY DISPOSE.

7. ALL EXPOSED CONCRETE SURFACES SHALL BE FORMED, TROWELED AND FINISHED TO PRESENT A NEAT APPEARANCE.

8. THE CONTRACTOR IS RESPONSIBLE FOR OBTAINING ALL PERMITS FROM THE APPROPRIATE AGENCIES AND SHALL COORDINATE WITH THE CITY FOR AN ELECTRICAL INSPECTION.

9. EXISTING SIGNAL FACES SHALL REMAIN VISIBLE AND ILLUMINATED UNTIL THE NEW SIGNALS ARE ACTIVATED. BLOCKING OF EXISTING FACES BY NEW FACES WILL REQUIRE THE NEW FACE TO BE TEMPORARILY WIRED FOR ILLUMINATION.

10. A WORK ZONE TRAFFIC CONTROL PLAN SHALL BE SUBMITTED TO THE CITY'S TRAFFIC ENGINEERING DIVISION FOR APPROVAL PRIOR TO CONSTRUCTION.

11. THE CONTRACTOR SHALL PROVIDE THE CITY WITH THREE (3) SETS OF EQUIPMENT SPECIFICATIONS/DESCRIPTIONS AND OBTAIN APPROVAL BEFORE ORDERING THE EQUIPMENT.

12. UPON COMPLETION OF THE WORK THE CONTRACTOR SHALL SUBMIT RECORD DRAWINGS IN HARDCOPY FORM (34" X 22" VELLUM OR MYLAR) OR ELECTRONIC FORM (*.DWG, *.DXF OR PDF FORMAT), CORRECTED PLANS AND ANY ADDITIONAL DATA REQUIRED BY THE CITY OF LAKEWOOD SHOWING IN DETAIL ALL CONSTRUCTION CHANGES.

13. PAYMENT SHALL BE MADE ONLY FOR ITEMS LISTED IN THE BID TABULATION. ALL OTHER ITEMS SHALL BE CONSIDERED INCIDENTAL TO THE WORK.

14. UNLESS OTHERWISE SPECIFIED, A NEW OVERHEAD STREET NAME SIGN SHALL BE FURNISHED AND INSTALLED ON EACH MAST ARM AS SHOWN IN CITY STANDARD DRAWING T–400B. THIS WORK WILL NOT BE PAID FOR SEPARATELY BUT SHALL BE INCLUDED IN THE COST OF THE TRAFFIC SIGNAL POLE.

GENERAL NOTES (CONT.)

15. MAST ARM SIGNAL HEADS SHALL BE MOUNTED APPROXIMATELY LEVEL WITH ONE ANOTHER, WITH A 17 TO 19 FOOT CLEARANCE ABOVE PAVEMENT GRADE AT ITS HIGHEST ELEVATION. THE LATERAL LOCATION OF THE SIGNAL HEADS SHALL BE FIELD LOCATED BY THE CITY OF LAKEWOOD PRIOR TO INSTALLING TENONS ON THE MAST ARMS. CONTACT THE TRAFFIC SIGNAL MAINTENANCE SUPERVISOR (303–987–7995) AT LEAST 72 HOURS IN ADVANCE FOR SIGNAL HEAD PLACEMENT.

16. ALL VEHICLE SIGNAL HEADS SHALL BE BLACK ALUMINUM WITH 12" SECTIONS AND TUNNEL VISORS.

17. ALL VEHICLE AND PEDESTRIAN TRAFFIC SIGNALS INDICATIONS SHALL BE L.E.D. TYPE IN ACCORDANCE WITH I.T.E. SPECIFICATIONS.

18. ALL OVERHEAD SIGNALS SHALL HAVE ALUMINUM BLACK BACK PLATES.

19. ALL PEDESTRIAN SIGNAL HEAD HOUSINGS SHALL BE BLACK IN COLOR, AND ALUMINUM. PEDESTRIAN SIGNALS SHALL BE 16–INCH AND DISPLAY THE INTERNATIONAL MAN/HAND SYMBOL WITH A COUNTDOWN TIMER DISPLAY UNLESS OTHERWISE SPECIFIED IN THE PLANS.

20. A PEDESTRIAN PUSH BUTTON SIGN (R10–4B) SHALL ACCOMPANY ALL PEDESTRIAN PUSH BUTTON UNITS AND SHALL BE INCIDENTAL TO THE "PEDESTRIAN PUSH BUTTON STATION" PAY ITEM.

21. WIRING SHALL BE 21–CONDUCTOR IMSA (14 AWG). WIRING FOR OUTBOARD SIGNAL HEADS AND FAR SIDE POLE MOUNTED HEADS SHALL BE A MINIMUM OF 7–CONDUCTOR CABLES TO ALLOW FOR INSTALLATION AND USE OF 5–SECTION HEADS FOR FUTURE USE. 5–CONDUCTOR CABLE SHALL BE USED FOR ALL OTHER HEADS.

22. ALL ELECTRICAL SYSTEMS SHALL BE PROPERLY GROUNDED IN ACCORDANCE WITH THE SPECIFICATIONS. A GROUND ROD SHALL BE INSTALLED IN ALL PULL BOXES. THE CONTROLLER CABINET SHALL BE GROUNDED WITH ITS OWN GROUND ROD AND BONDED WITH #6 AWG STANDARD COPPER WITH GREEN INSULATION. ALL GROUND RODS SHALL BE GROUNDED TOGETHER IN A SINGLE GROUND ARRAY FOR THE ENTIRE INTERSECTION.

23. WIRING FOR LUMINAIRES SHALL BE PROVIDED FROM THE POWER SOURCE TO THE END OF THE LUMINAIRE ARM. A BREAKAWAY INLINE FUSE SHALL BE PROVIDED AT THE HAND HOLE ACCESS AT THE BASE OF THE POLE.

24. PEDESTRIAN AND VEHICLE SIGNAL HEADS SHALL BE INDIVIDUALLY WIRED FROM THE POLE BASE TO THE SIGNAL HEAD.

25. POWER PEDESTALS INSTALLED TO HOUSE AN XCEL ENERGY ELECTRIC METER WILL BE ON THE CURRENT XCEL ENERGY APPROVED LIST.

Public Works Department
Traffic Engineering Division
480 S. Allison Pkwy
Lakewood, Colorado
80226

City of Lakewood
Traffic Signal Standards

GENERAL TRAFFIC SIGNAL EQUIPMENT INSTALLATION NOTES

Date	Sheet Revisions	Approved:	File:
10/21/04	ORIGINAL	Director of Public Works	
		Approved:	Sheet No: 2
		City Traffic Engineer	

NOTES

1. THE INTENT OF THE MAST ARM AND POLE PERFORMANCE CRITERIA SHEET IS TO PROVIDE A PERFORMANCE STANDARD FOR TRAFFIC SIGNAL INSTALLATIONS WITHIN THE CITY OF LAKEWOOD. MANUFACTURING STANDARDS AND SUBMITTALS MUST MEET THE LISTED CRITERIA AND CERTIFICATION REQUIREMENTS BELOW.

2. THE CONTRACTOR IS REQUIRED TO PROVIDE DRAWINGS FOR ALL TRAFFIC SIGNAL POLES, MAST ARMS AND CONNECTIONS THAT HAVE BEEN CERTIFIED (STAMPED BY A COLORADO PROFESSIONAL ENGINEER) TO BE IN COMPLIANCE WITH THE DESIGN CRITERIA CONTAINED HEREIN AND THE CITY OF LAKEWOOD SPECIFICATIONS.

3. ALL TRAFFIC SIGNAL EQUIPMENT, POLES, MAST ARMS, CONNECTIONS, FOUNDATIONS, AND RELATED ITEMS SHALL BE DESIGNED IN ACCORDANCE WITH THE AASHTO STANDARD SPECIFICATIONS FOR STRUCTURAL SUPPORTS FOR HIGHWAY SIGNS, LUMINAIRES AND TRAFFIC SIGNALS, FOURTH EDITION, 2001 CRITERIA EXCEPT AS MODIFIED BELOW:
   A. 50-YEAR DESIGN LIFE
   B. 100-MPH WIND VELOCITY
   C. FATIGUE CATEGORY II
   D. NO GALLOPING FORCES
   E. NO TRUCK GUST FORCES

4. ALL TRAFFIC SIGNAL POLES AND MAST ARMS SHALL BE STRAIGHT-TAPERED, TUBULAR STEEL. THE POLE AND MAST ARMS SHALL BE COLORED/FINISHED "FEDERAL COLOR STANDARD 20065" USING A HYDROSTATIC POWDER COAT PAINT PROCESS (OR AN APPROVED EQUAL) DURING FABRICATION.

5. ALL TRAFFIC SIGNAL POLES AND MAST ARMS SHALL BE DELIVERED TO THE PROJECT SITE (OR DESIGNATED DELIVERY YARD) WRAPPED OR PROTECTED IN A WAY NOT TO SCRATCH OR MAR THE EQUIPMENT DURING TRANSPORT.

6. TWO HANDHOLES ARE REQUIRED ON TRAFFIC SIGNAL LIGHT POLES WITH MAST ARMS; ONE AT THE BASE OF THE POLE AND ONE AT THE MAST ARM CONNECTION. PEDESTAL POLES SHALL HAVE ONE HANDHOLE. IN BOTH INSTALLATIONS, THE HANDHOLE OPENING AT THE BASE OF THE POLE(S) SHALL BE 5"x8" (MINIMUM). THE HANDHOLE OPENING AT THE MAST ARM CONNECTION SHALL BE 4"x6" (MINIMUM). HANDHOLE COVERS SHALL BE FASTENED BY MACHINE SCREWS (STAINLESS STEEL) MOUNTED AT THE TOP AND BOTTOM OF EACH COVER. MACHINE THREADED "L" BRACKETS SHALL BE WELDED INSIDE THE POLE HANDHOLE TO ACCEPT SCREWS.

7. THE MAST ARM TAPER RATE SHALL BE -0.14 INCH PER FOOT. THE MAST ARM SHALL HAVE A RAKE OF APPROXIMATELY 2 ABOVE HORIZONTAL WHEN FULLY LOADED.

8. ALL SPLICES IN STEEL MAST ARMS, STEEL MAST ARM POLES AND SPAN WIRE POLES SHALL BE CRIMP CONNECTORS.

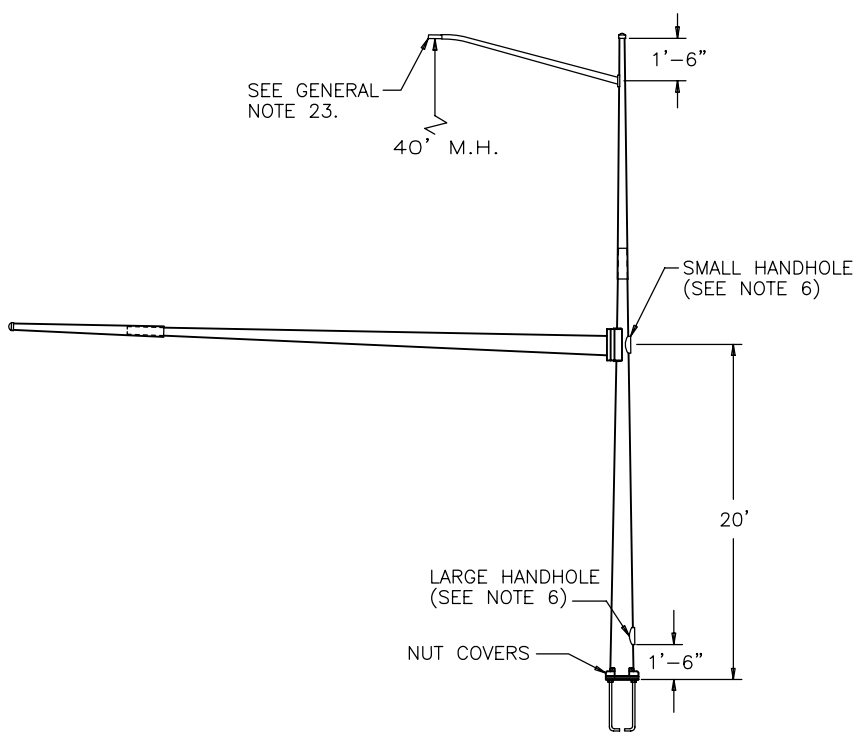

TYPICAL SIGNAL POLE AND MAST ARM ILLUSTRATION

DEVICE	DESCRIPTION	PROJ. AREA (FT ^{2})	WEIGHT (LBS)
(A)	12"-5 SEC. SIGNAL WITH BACKPLATE	13.72	71.00
(B)	12"-3 SEC. SIGNAL WITH BACKPLATE	8.67	38.00
(C)	12"-5 SEC. SIGNAL WITHOUT BACKPLATE	6.81	48.00
(D)	16" PEDESTRIAN	2.50	60.00
(E)	30" X 36" REGULATORY SIGN	7.50	25.00
(F)	18" X 84" STREET NAME SIGN	10.50	31.50
(G)	LUMINAIRE	3.3	55.00
(H)	CAMERA	2.2	9.00

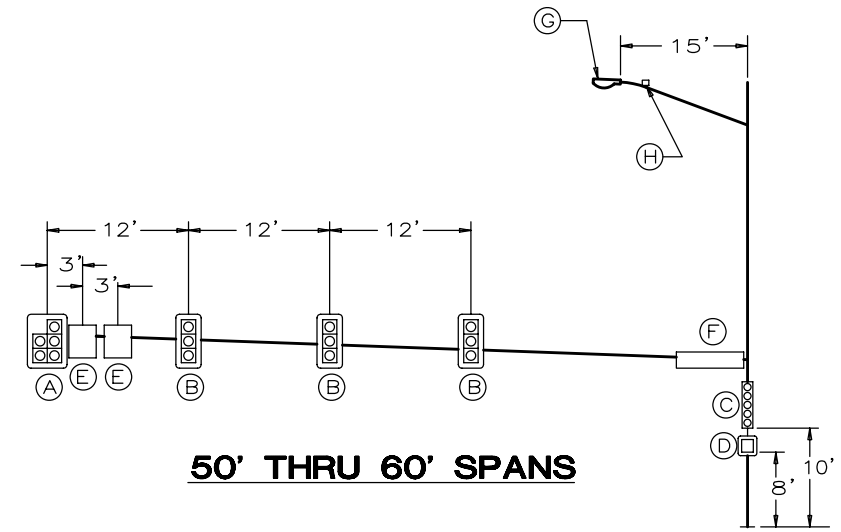

50' THRU 60' SPANS

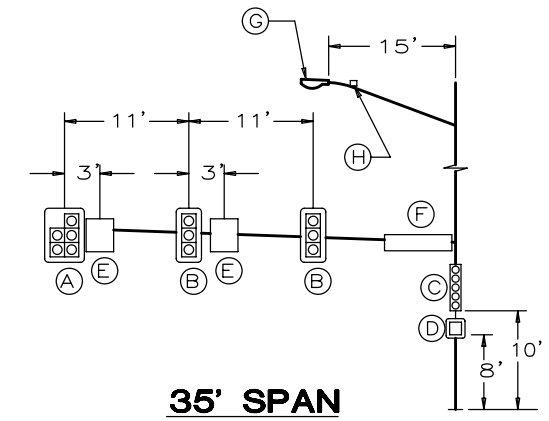

35' SPAN

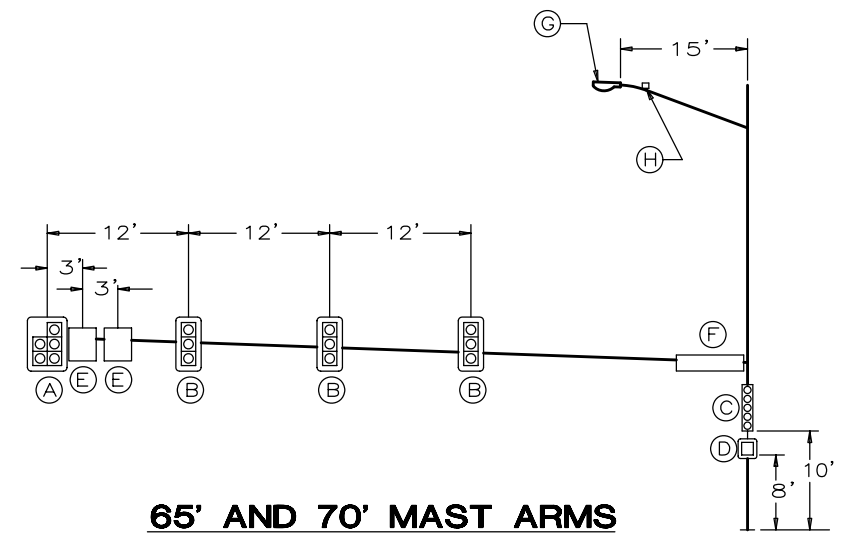

65' AND 70' MAST ARMS

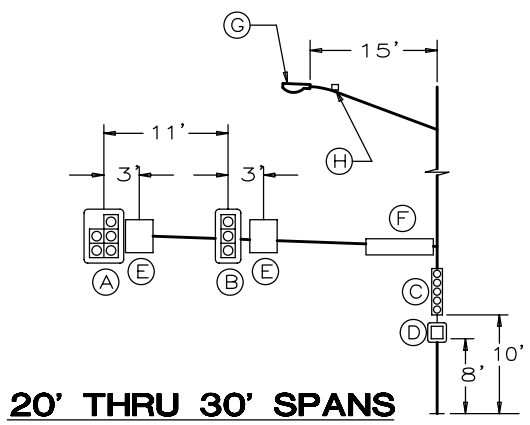

20' THRU 30' SPANS

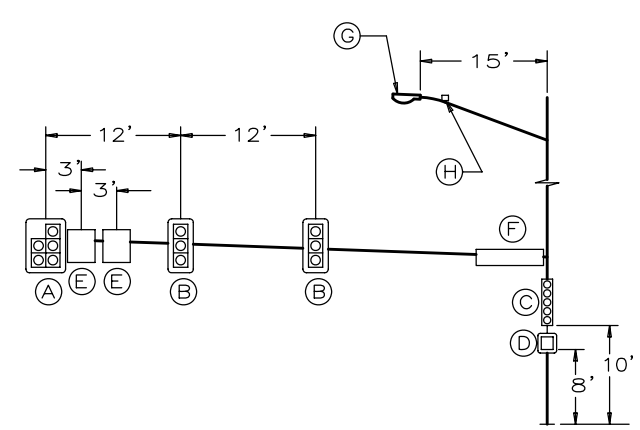

40' AND 45' SPANS

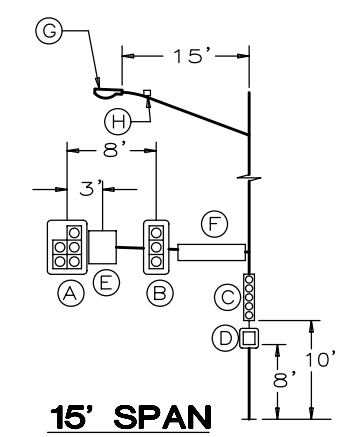

15' SPAN

Public Works Department
Traffic Engineering Division
480 S. Allison Pkwy
Lakewood, Colorado
80226

City of Lakewood
Traffic Signal Standards

SIGNAL POLES AND MAST ARMS

Date	Sheet Revisions	Approved:	File:
10/21/04	ORIGINAL	Director of Public Works	
		Approved:	Sheet No:
		City Traffic Engineer	3

S:\ENG CITY STD\TRAFFIC STD 2011\03 STD-DET-POLE-ARM.DWG FEB. 02, 2012

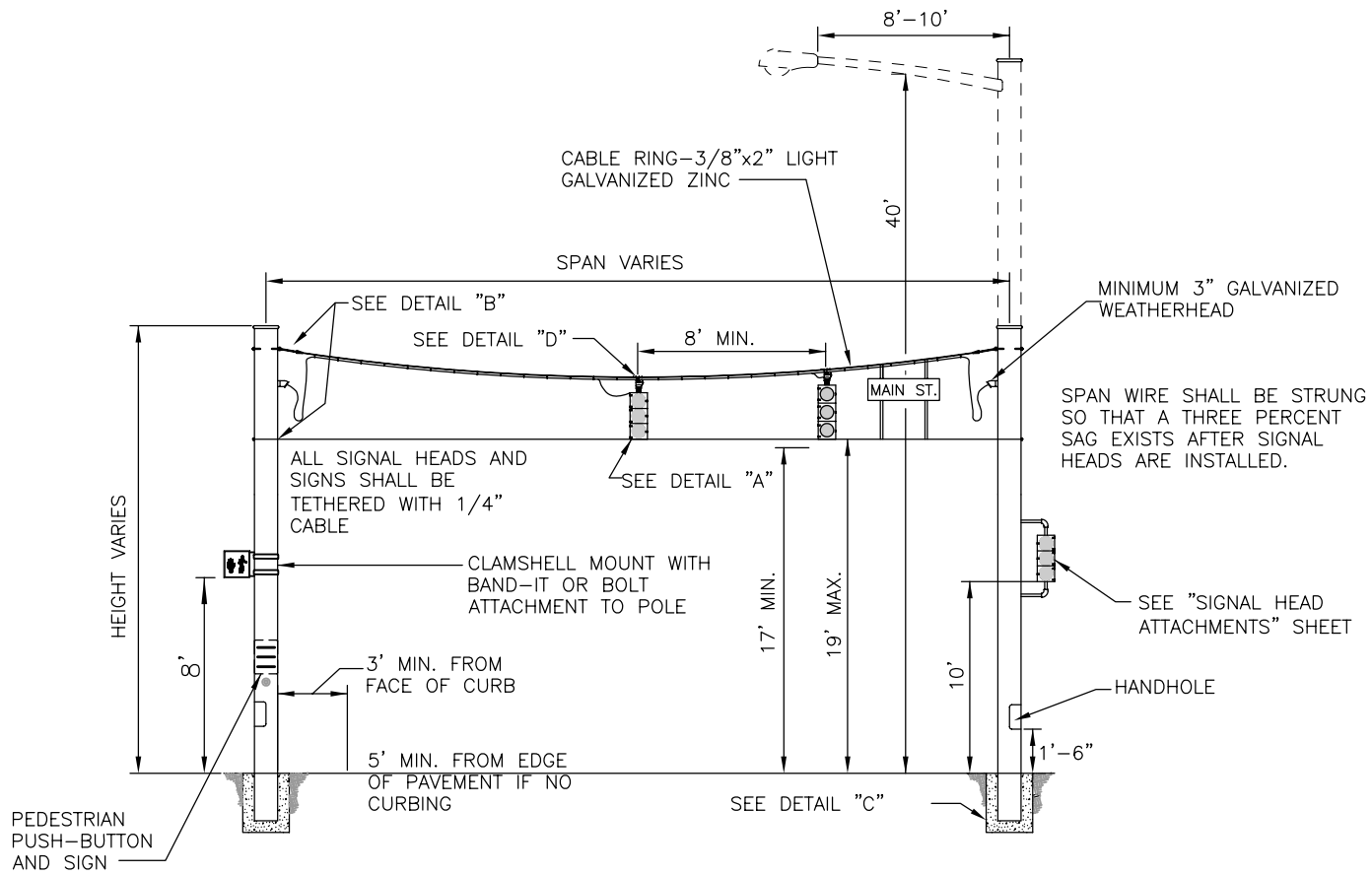

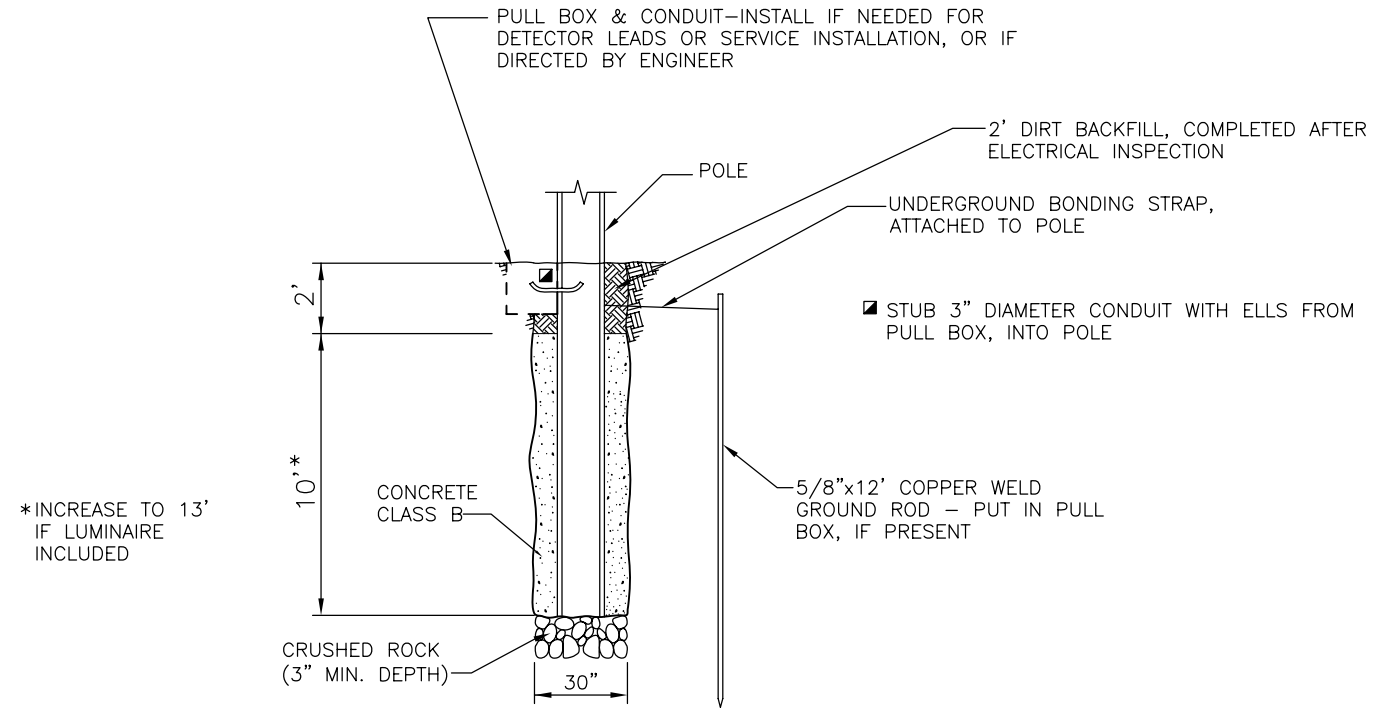

DETAIL "C"

TYPICAL TRAFFIC SIGNAL SPAN WIRE POLE FOOTING (CAST IN PLACE)

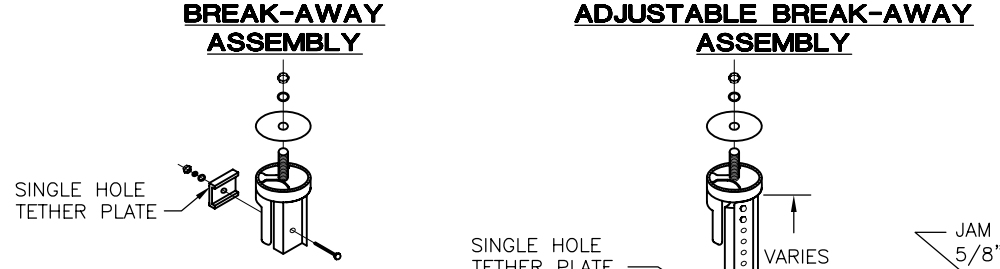

DETAIL "A"

TETHERING OPTIONS

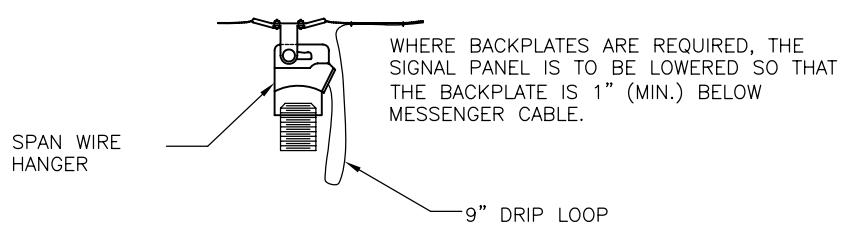

DETAIL "D"

TYPICAL SPAN WIRE MOUNTING

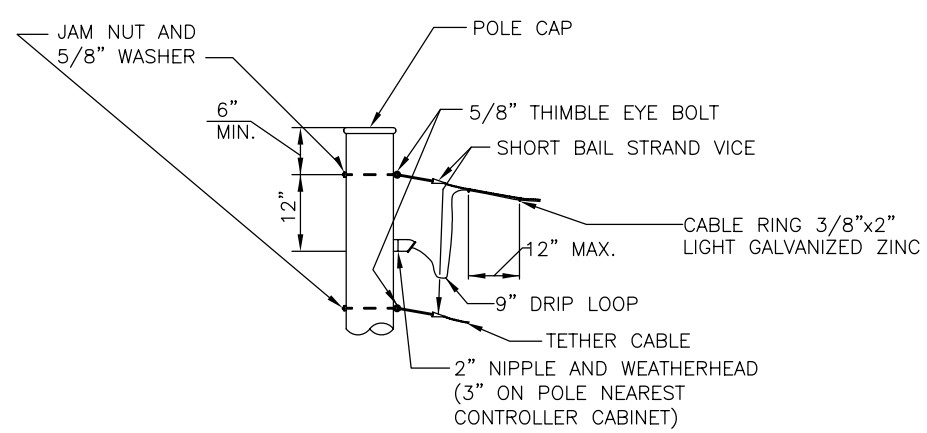

DETAIL "B"

TYPICAL CABLE AND TETHER INSTALLATION

NOTES

1. SPAN WIRE POLES SHALL HAVE 1 COAT OF ZINC RICH MATERIAL FROM THE BASE TO A POINT 10' ABOVE THE BASE. AND FINISHED WITH 1 COAT OF RUST INHIBITIVE PRIMER AND 1 COAT OF FEDERAL COLOR STANDARD 20065 FINISH PAINT. PAINT COLOR SPECIFICATION TO BE SUPPLIED BY CITY UPON REQUEST. POLE SURFACE SHALL BE WIPED CLEAN AND FREE OF DEBRIS PRIOR TO FINISH APPLICATION. FINISH APPLICATION SHALL BE COMPLETED PRIOR TO INSTALLATION OF SIGNAL/PEDESTRIAN HEADS AND PEDESTRIAN PUSH BUTTONS. FOLLOWING INSTALLATION OF THESE ITEMS, CONTRACTOR SHALL TOUCH UP NICKS AND ABRASIONS AS NEEDED.
2. DESIGN CRITERIA SHALL MEET LATEST AASHTO EDITION OF "STANDARD SPECIFICATIONS FOR STRUCTURAL SUPPORTS FOR HIGHWAY SIGNS, LUMINAIRES AND TRAFFIC SIGNALS," FOR A WIND VELOCITY OF 100 MPH.
3. SPAN WIRE POLES SHALL BE FABRICATED OF STEEL WITH A MIN. DIAMETER OF 12", A MIN. YIELD STRENGTH OF 35 KSI. AND A MIN. WEIGHT PER LINEAR FOOT OF 49.5 LB. FOR 12" DIA. POLES. POLES SHALL BE INSTALLED SO THAT THEY WILL BE PLUMB WHEN DEFLECTED BY THE INSTALLED LOAD. SPAN WIRE CABLE SHALL BE A MINIMUM OF 3/8 INCH DIAMETER RATED AT A MINIMUM OF 13,000 POUNDS.
4. SPAN WIRE SIGNAL HEADS SHALL HAVE ONE POWER FEED WIRE IN PER HEAD. CONNECTIONS SHALL BE MADE ONLY ON THE SIGNAL HEAD TERMINALS, WITH NO EXTERNAL SPLICES.

SPAN WIRE POLE DETAIL

(FOR SPECIAL USE, WITH PRIOR APPROVAL OF CITY ONLY)

Public Works Department
Traffic Engineering Division
480 S. Allison Pkwy
Lakewood, Colorado
80226

City of Lakewood
Traffic Signal Standards

SPAN WIRE POLE INSTALLATION

Date	Sheet Revisions	Approved:	File:
10/21/04	ORIGINAL	Director of Public Works	
		Approved:	Sheet No:
		City Traffic Engineer	4

S:\ENG CITY STD\TRAFFIC STD 2011\04 STD-DET-SIGNPOLE.DWG FEB. 14, 2012

FOUNDATION NOTES

1. ANCHOR BOLTS (FURNISHED WITH POLE) PER MANUFACTURER'S TEMPLATE.
2. THESE DESIGNS REQUIRE THAT THE FOOTING BE FOUNDED IN COMPACT SAND, CLAY OR SANDY CLAY, AND BE LOCATED ABOVE THE WATER TABLE. IF, BY VISUAL INSPECTION OF THE HOLE, OTHER MATERIAL IS PRESENT, THE FOUNDATION DESIGN MAY NEED TO BE MODIFIED AS SPECIFIED BY THE CITY.
3. 5/8"x12' COPPERWELD GROUND ROD THROUGH FOUNDATION INTO GROUND, OR DRIVEN IN ADJACENT PULL BOX AND BONDED TO POLE WITH CONTINUITY THROUGH ENTIRE SIGNAL.

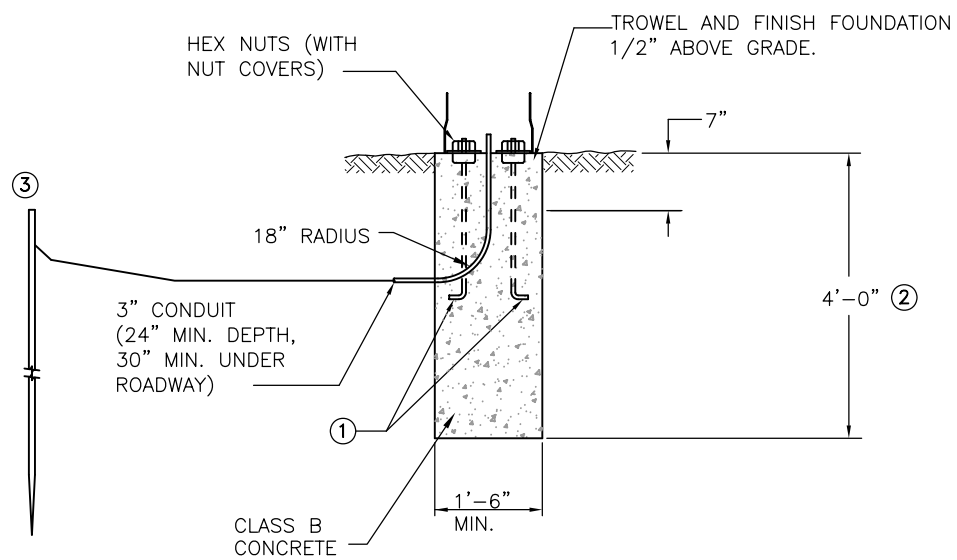

TYPICAL PEDESTAL POLE FOUNDATION

(CAST IN PLACE)

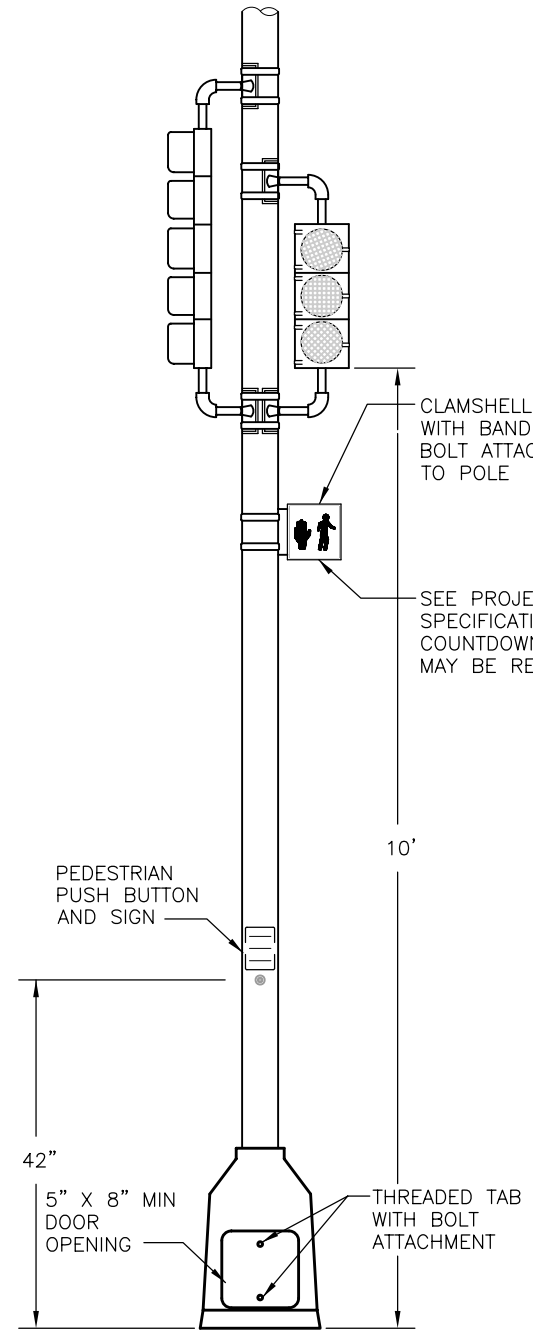

MAST ARM POLE

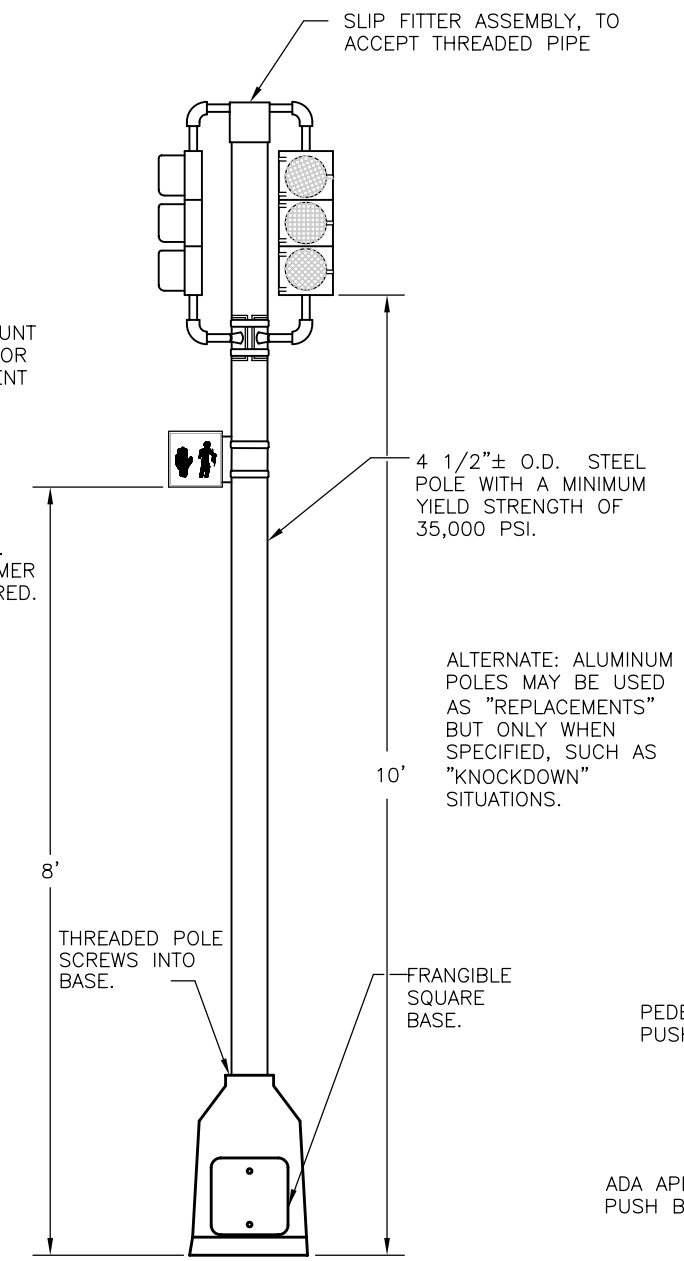

PEDESTAL POLE

TYPICAL SIGNAL HEAD MOUNTING DETAIL

R10-4b
5" x 7"

TYPICAL PEDESTRIAN PUSH-BUTTON SIGN

(ONE EACH PEDESTRIAN SIGNAL HEAD LOCATION)

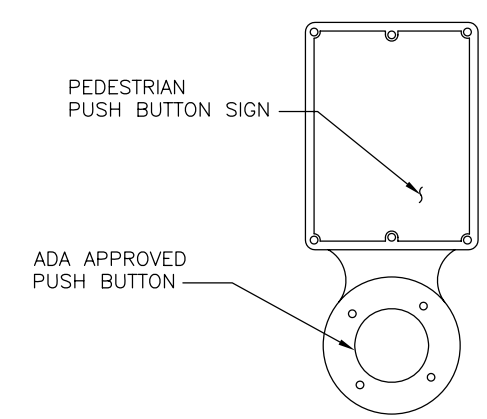

PUSH-BUTTON DETAIL

Public Works Department
Traffic Engineering Division
480 S. Allison Pkwy
Lakewood, Colorado
80226

City of Lakewood
Traffic Signal Standards

PEDESTAL POLE AND PEDESTRIAN PUSH-BUTTON/SIGNAGE

Date	Sheet Revisions	Approved:	File:
10/21/04	ORIGINAL	Director of Public Works	
		Approved:	Sheet No:
		City Traffic Engineer	5

S:\ENG CITY STD\TRAFFIC STD 2011\05 STD-DET-PED.DWG FEB. 14, 2012

15 FOOT THROUGH 60 FOOT MAST ARM TRAFFIC SIGNAL POLE FOUNDATION

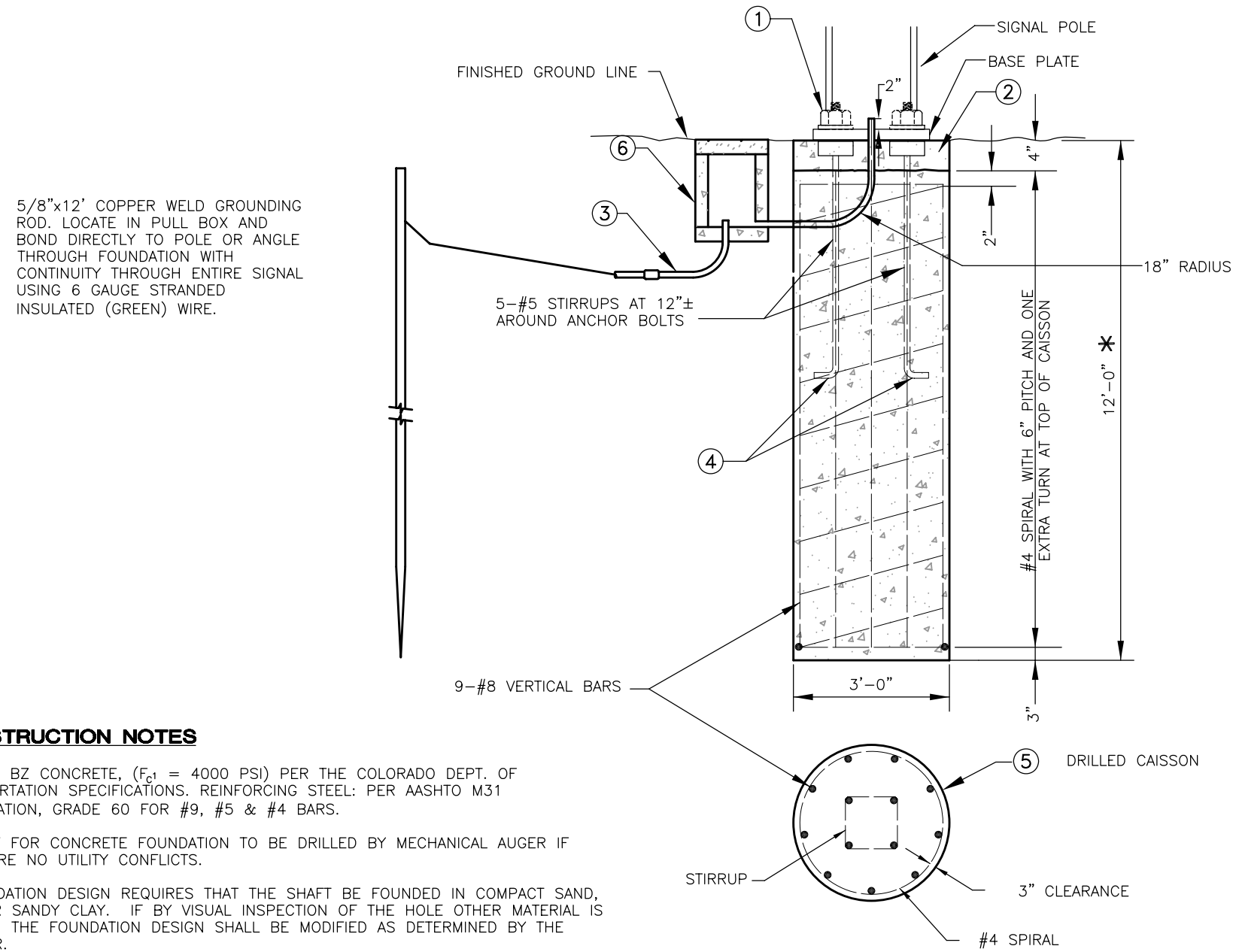

* FOR 55 TO 60 FOOT MAST ARM LENGTHS, INCREASE DEPTH TO 15'-0" AND EXTEND #4 SPIRAL STEEL. THESE DESIGNS REQUIRE THAT THE FOOTING BE FOUNDED IN COMPACT SAND, CLAY OR SANDY CLAY, AND BE LOCATED ABOVE THE WATER TABLE. IF, BY VISUAL INSPECTION OF THE HOLE OTHER MATERIAL IS PRESENT SUCH AS BEDROCK OR SOFT CLAY, A SOIL INVESTIGATION MAY BE NECESSARY TO DETERMINE CONDITIONS AND TO MODIFY THE DESIGN ACCORDINGLY.

** FOUNDATIONS FOR SIGNAL POLE INSTALLATIONS WITH TWIN MAST ARMS SHALL BE CONSTRUCTED IN ACCORDANCE WITH CDOT STANDARD S-614-40.

CONSTRUCTION NOTES

1. CLASS BZ CONCRETE, (F_{c1} = 4000 PSI) PER THE COLORADO DEPT. OF TRANSPORTATION SPECIFICATIONS. REINFORCING STEEL: PER AASHTO M31 SPECIFICATION, GRADE 60 FOR #9, #5 & #4 BARS.

2. SHAFT FOR CONCRETE FOUNDATION TO BE DRILLED BY MECHANICAL AUGER IF THERE ARE NO UTILITY CONFLICTS.

3. FOUNDATION DESIGN REQUIRES THAT THE SHAFT BE FOUNDED IN COMPACT SAND, CLAY, OR SANDY CLAY. IF BY VISUAL INSPECTION OF THE HOLE OTHER MATERIAL IS PRESENT, THE FOUNDATION DESIGN SHALL BE MODIFIED AS DETERMINED BY THE ENGINEER.

4. SHOULD ROCK BE ENCOUNTERED, THE SHAFT SHOULD EXTEND 6 FT. MINIMUM INTO ROCK. THE ALLOWABLE SAFE LATERAL BEARING CAPACITY OF ROCK TO BE 4,300 LBS./SQ. FT. THE SOIL (INCLUDING ROCK) SURROUNDING THE SHAFT SHOULD BE INVESTIGATED TO ENSURE IT WILL RESIST THE TORSIONAL MOMENT OF 93,435 FT. LBS.

5. CONCRETE SHALL BE POURED IN LIFTS NOT EXCEEDING 3 FEET IN DEPTH. AT THE POURING OF EACH LIFT, CONCRETE SHALL BE MECHANICALLY VIBRATED TO REMOVE AIR POCKETS.

6. FOUNDATIONS SHOULD BE POURED 7 DAYS MINIMUM IN ADVANCE OF POLE INSTALLATION. SEE PROJECT SPECIAL PROVISIONS FOR SPECIFIC DIRECTIONS.

7. WHEN AMBIENT TEMPERATURE IS BELOW 40° F, POURED FOUNDATIONS SHALL BE COVERED WITH BLANKETS AND/OR STRAW PER DIRECTION OF THE ENGINEER.

FOUNDATION NOTES

1. HEX NUTS (WITH NUT COVER)
2. 4" LEVELING CONCRETE (CLASS B, 3000 PSI) OVER ROUGH FOUNDATION
3. CONDUIT STUB FROM PULL BOX TO POLE SHALL BE TWO 2" AND TWO 3".
4. INSTALL ANCHOR BOLTS (FURNISHED WITH POLE) PER STANDARD TEMPLATE. (FURNISHED WITH ORDER)
5. DRILLED CAISSONS SHALL BE CONSTRUCTED IN ACCORDANCE WITH CDOT STANDARD SPECIFICATIONS FOR ROAD AND BRIDGE CONSTRUCTION, SECTION 503. CONCRETE SHALL NOT BE PLACED IN MORE THAN 3 INCHES OF STANDING WATER.
6. PULL BOX (SEE PRECAST PULL BOX DETAILS SHEET)

Public Works Department
Traffic Engineering Division
480 S. Allison Pkwy
Lakewood, Colorado
80226

City of Lakewood
Traffic Signal Standards

15' THROUGH 60' MAST ARM SIGNAL POLE FOUNDATIONS

Date	Sheet Revisions	Approved:	File:
		Director of Public Works	
10/21/04	ORIGINAL	Approved:	Sheet No: 6
10/20/10	Pull Box Conduit	City Traffic Engineer	

65 FOOT AND 70 FOOT MAST ARM TRAFFIC SIGNAL POLE FOUNDATION

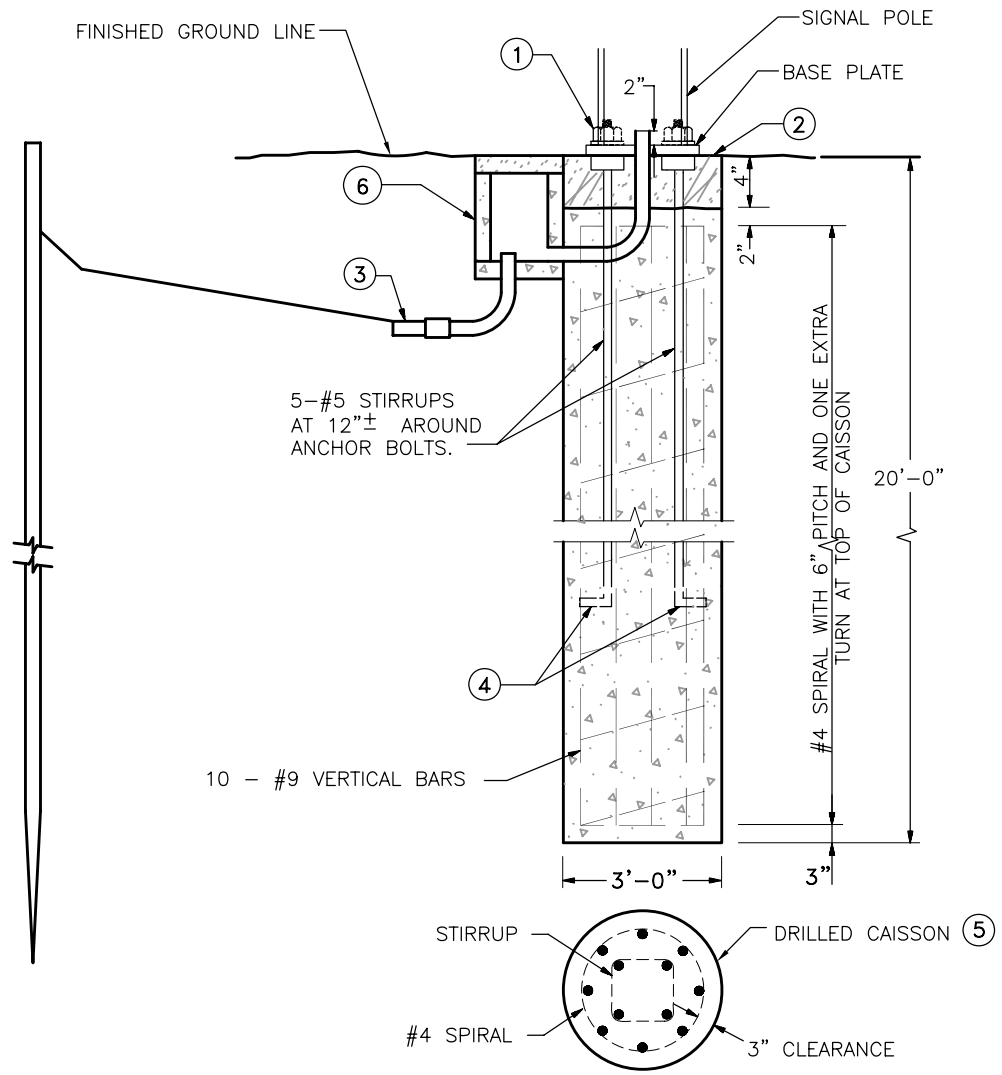

5/8"x12' COPPER WELD GROUNDING ROD. LOCATE IN PULL BOX AND BOND DIRECTLY TO POLE, OR ANGLE THROUGH FOUNDATION WITH CONTINUITY TROUGH ENTIRE SIGNAL USING 6 GAUGE WIRE.

DESIGN NOTES

1. DESIGN ASSUMES CAISSON DRILLED IN APPROXIMATELY LEVEL NATIVE SOIL WITH A LATERAL MODULUS OF ELASTICITY OF 100 PCI AND AN ALLOWABLE LATERAL BEARING STRESS OF 1000 PSF. IF MORE THAN 3 FEET OF FILL IS PRESENT OR IF BY VISUAL REVIEW OF THE HOLE, MATERIAL OF LESSER QUALITY IS PRESENT, THE CAISSON DESIGN SHALL BE MODIFIED AS DETERMINED BY THE ENGINEER.

2. MAXIMUM LOADS FOR 65–FOOT TRAFFIC SIGNAL FOOTING PROVIDED BY VALMONT INDUSTRIES ARE AS FOLLOWS:

   P = 5185 LBS.
   V = 5115 LBS.
   M = 132,003 FT–LB
   T = 129,469 FT–LB

   MAXIMUM LOADS FOR 70–FOOT TRAFFIC SIGNAL FOOTING PROVIDED BY VALMONT INDUSTRIES ARE AS FOLLOWS:

   P = 5186 LBS.
   V = 4654 LBS.
   M = 129,060 FT–LB
   T = 144,186 FT–LB

3. BASED ON AN EQUIVALENT FLUID PRESSURE OF 61.6 PCF AND A SOIL/CONCRETE COEFFICIENT OF 0.5, THE FACTOR OF SAFETY AGAINST ROTATIONAL SLIDING OF THE FOOTING IS 1.30.

   A ROUGH CAISSON/SOIL INTERFACE IS THUS DESIRABLE PROVIDED CAISSON VERTICALITY AND MINIMUM REINFORCING STEEL CLEARANCES ARE MAINTAINED.

4. FOUNDATIONS FOR SIGNAL POLE INSTALLATIONS WITH TWIN MAST ARMS SHALL BE CONSTRUCTED IN ACCORDANCE WITH CDOT STANDARD S–614–40.

CONSTRUCTION NOTES

1. CLASS BZ CONCRETE, ($F_{c'}$ = 4000 PSI) PER THE COLORADO DEPT. OF TRANSPORTATION SPECIFICATIONS. REINFORCING STEEL: PER AASHTO M31 SPECIFICATION, GRADE 60 FOR #9, #5 & #4 BARS.

2. SHAFT FOR CONCRETE FOUNDATION TO BE DRILLED BY MECHANICAL AUGER IF THERE ARE NO UTILITY CONFLICTS.

3. FOUNDATION DESIGN REQUIRES THAT THE SHAFT BE FOUNDED IN COMPACT SAND, CLAY, OR SANDY CLAY. IF BY VISUAL INSPECTION OF THE HOLE OTHER MATERIAL IS PRESENT, THE FOUNDATION DESIGN SHALL BE MODIFIED AS DETERMINED BY THE ENGINEER.

4. SHOULD ROCK BE ENCOUNTERED, THE SHAFT SHOULD EXTEND 6 FT. MINIMUM INTO ROCK. THE ALLOWABLE SAFE LATERAL BEARING CAPACITY OF ROCK TO BE 4,300 LBS./SQ. FT. THE SOIL (INCLUDING ROCK) SURROUNDING THE SHAFT SHOULD BE INVESTIGATED TO ENSURE IT WILL RESIST THE TORSIONAL MOMENT OF 93,435 FT. LBS.

5. CONCRETE SHALL BE POURED IN LIFTS NOT EXCEEDING 3 FEET IN DEPTH. AT THE POURING OF EACH LIFT, CONCRETE SHALL BE MECHANICALLY VIBRATED TO REMOVE AIR POCKETS.

6. FOUNDATIONS SHOULD BE POURED 7 DAYS MINIMUM IN ADVANCE OF POLE INSTALLATION. SEE PROJECT SPECIAL PROVISIONS FOR SPECIFIC DIRECTIONS.

7. WHEN AMBIENT TEMPERATURE IS BELOW 40° F, POURED FOUNDATIONS SHALL BE COVERED WITH BLANKETS AND/OR STRAW PER DIRECTION OF THE ENGINEER.

FOUNDATION NOTES

1. HEX NUTS (WITH NUT COVER)
2. 4" LEVELING CONCRETE (CLASS B, 3000 PSI) OVER ROUGH FOUNDATION
3. CONDUIT STUB FROM PULL BOX TO POLE SHALL BE TWO 2" AND TWO 3".
4. INSTALL ANCHOR BOLTS (FURNISHED WITH POLE) PER STANDARD TEMPLATE. (FURNISHED WITH ORDER)
5. DRILLED CAISSONS SHALL BE CONSTRUCTED IN ACCORDANCE WITH CDOT STANDARD SPECIFICATIONS FOR ROAD AND BRIDGE CONSTRUCTION, SECTION 503. CONCRETE SHALL NOT BE PLACED IN MORE THAN 3 INCHES OF STANDING WATER.
6. PULL BOX (SEE PRECAST PULL BOX DETAILS SHEET)

Public Works Department
Traffic Engineering Division
480 S. Allison Pkwy
Lakewood, Colorado
80226

City of Lakewood
Traffic Signal Standards

65' AND 70' MAST ARM SIGNAL POLE FOUNDATIONS

Date	Sheet Revisions	Approved:	File:
		Director of Public Works	
10/21/04	ORIGINAL	Approved:	Sheet No: 7
10/20/10	CONDUIT NOTE	City Traffic Engineer	

S:\ENG CITY STD\TRAFFIC STD 2011\07 STD-DET-MAST2.DWG DEC. 16, 2011

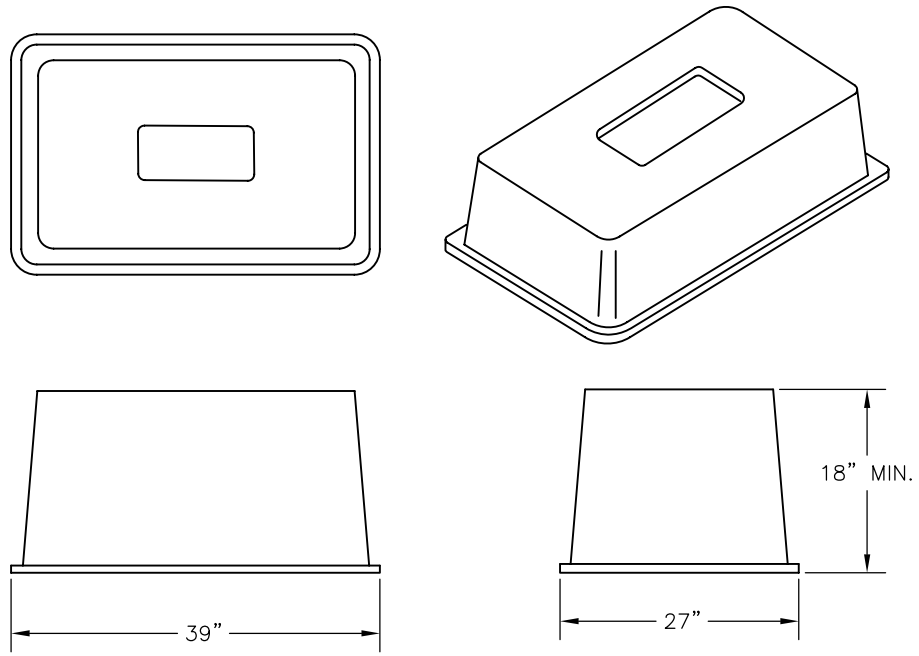

NEMA CABINET BASE (TYPE "M")

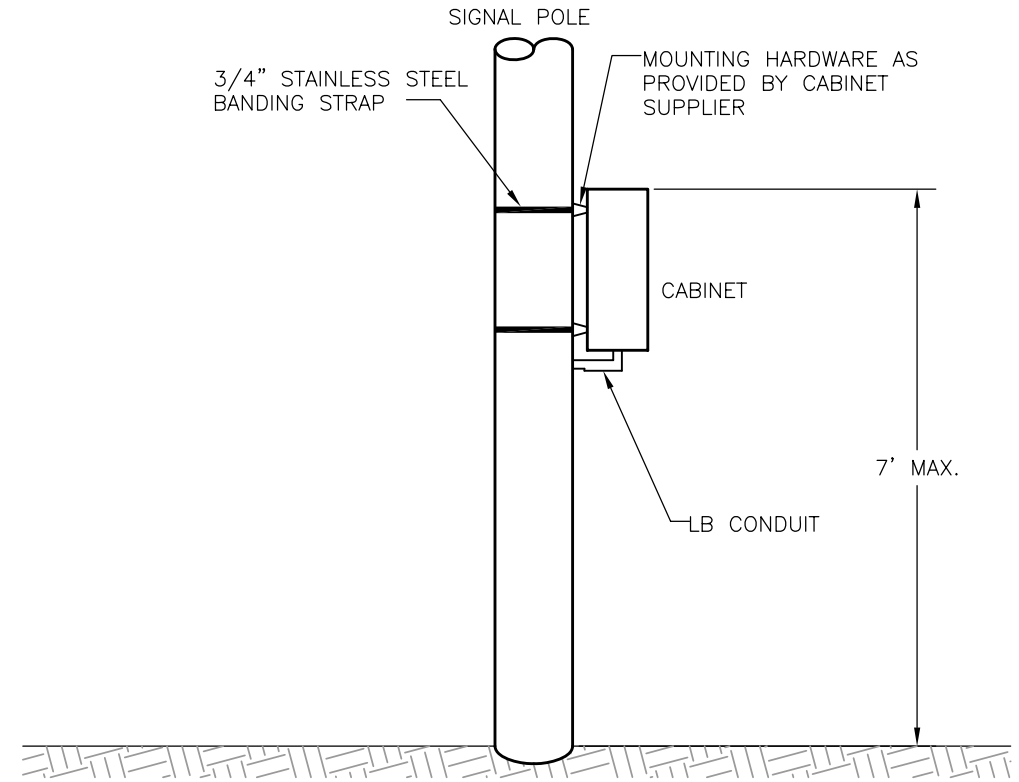

TYPICAL SIDE-OF-POLE MOUNTED CONTROLLER CABINET

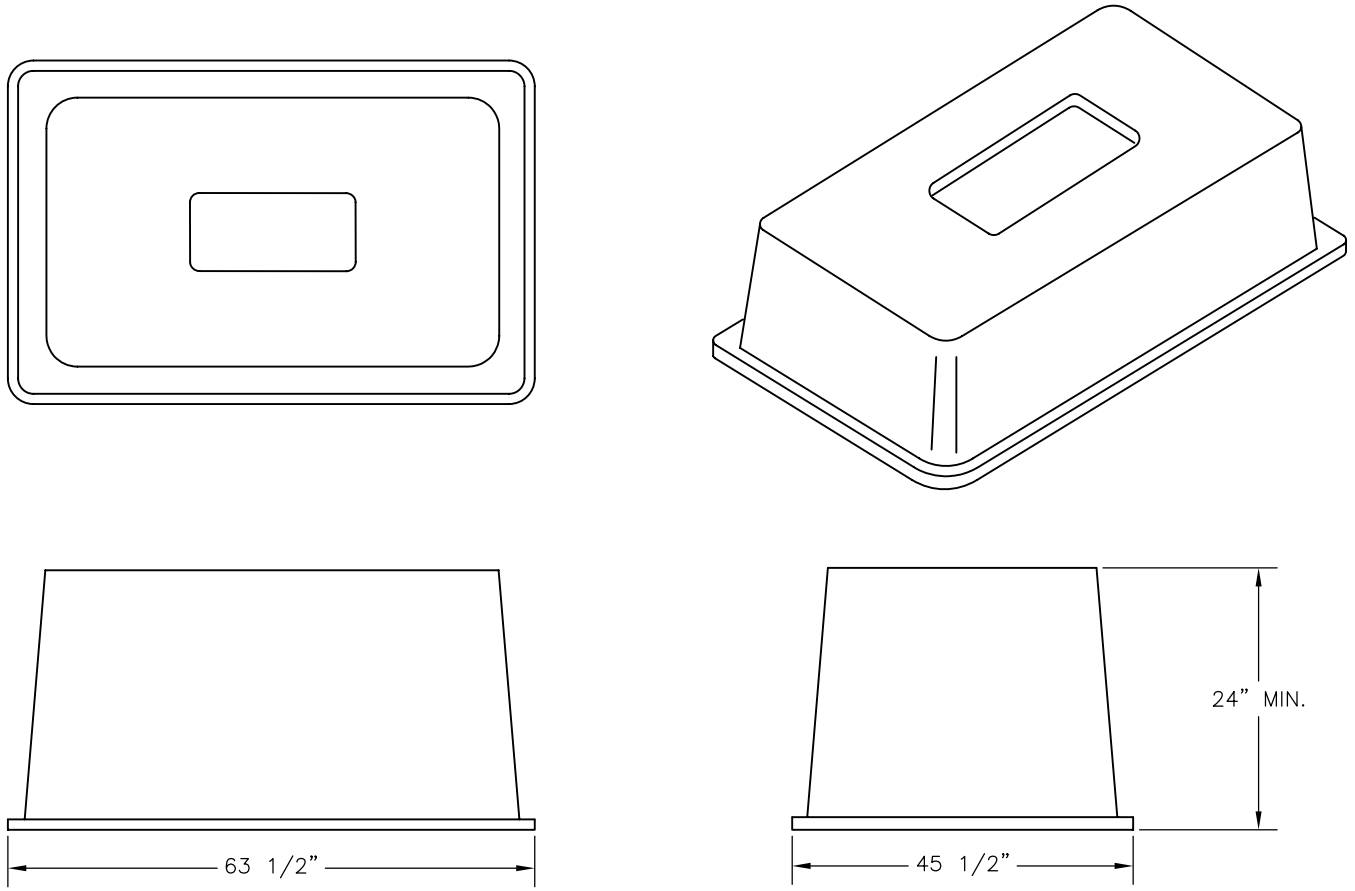

NEMA CABINET BASE (TYPE "P")

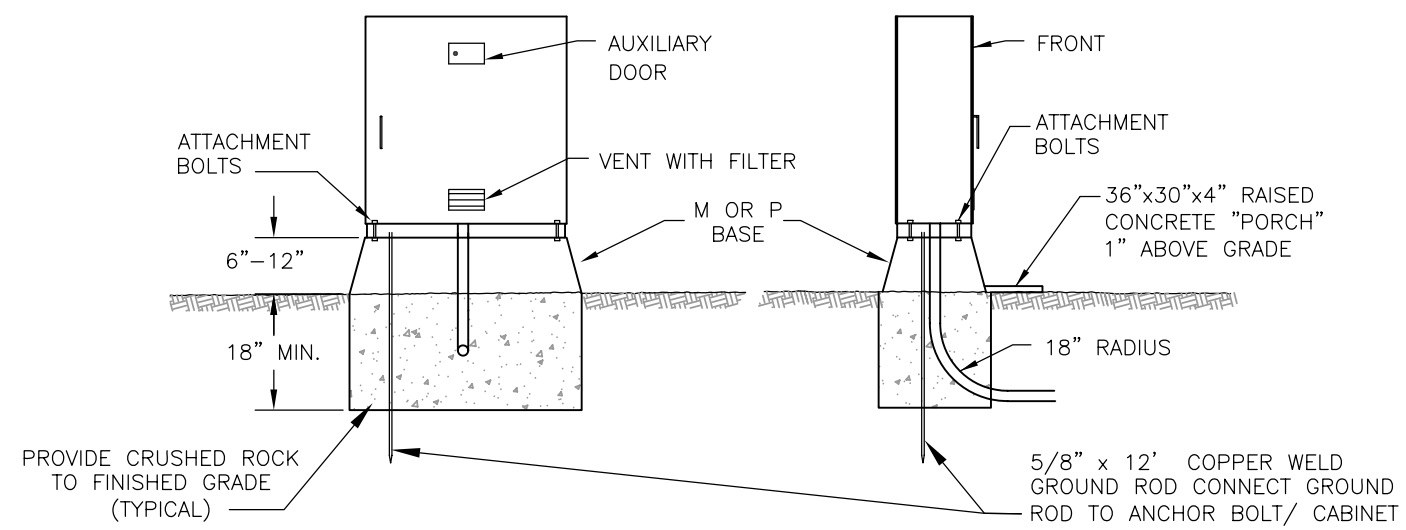

TYPICAL BASE MOUNTED CONTROLLER CABINET AND FIBERGLASS FOUNDATION

NOTE: CONTROLLER CABINETS SHALL BE INSTALLED SUCH THAT WITH THE FRONT DOOR OPEN A TECHNICIAN VIEWS BOTH THE CONTROLLER AND INTERSECTION.

Public Works Department
Traffic Engineering Division
480 S. Allison Pkwy
Lakewood, Colorado
80226

City of Lakewood
Traffic Signal Standards

CONTROLLER BASE AND CABINET

Date	Sheet Revisions	Approved:	File:
10/21/04	ORIGINAL	Director of Public Works	
		Approved:	Sheet No:
		City Traffic Engineer	8

S:\ENG CITY STD\TRAFFIC STD 2011\04 STD-DET-CONTROL.DWG FEB. 14, 2012

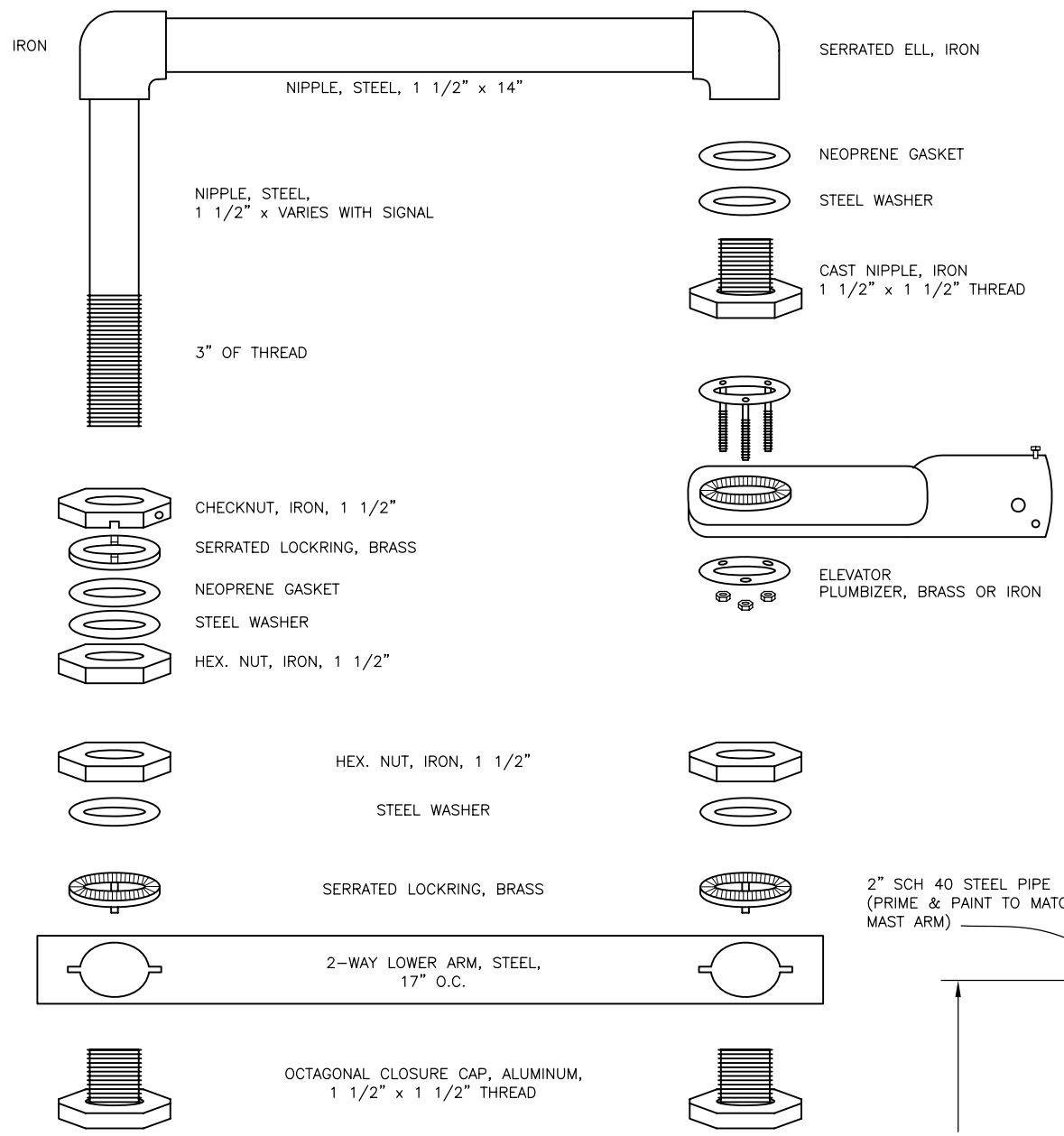

5 SECTION SIGNAL HARDWARE

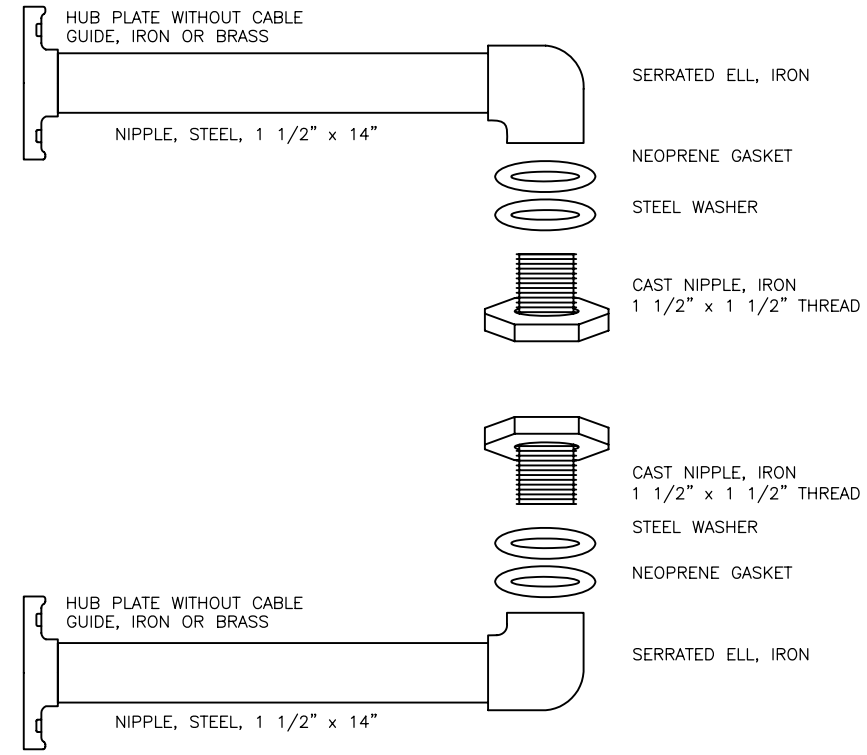

SIDE OF POLE SIGNAL HARDWARE

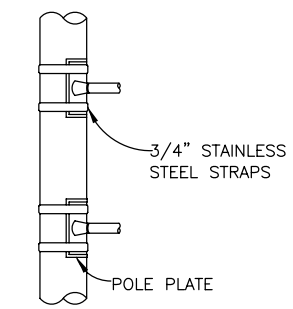

TYPICAL SIDE OF POLE SIGNAL MOUNTING

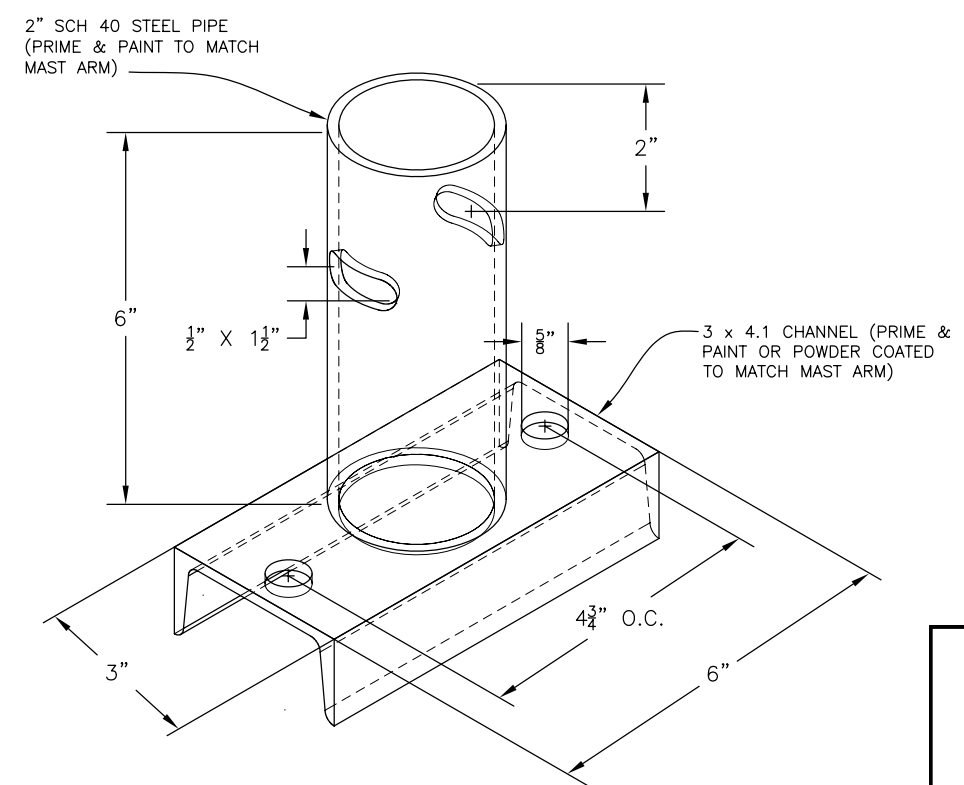

DETAIL A TRAFFIC TENON

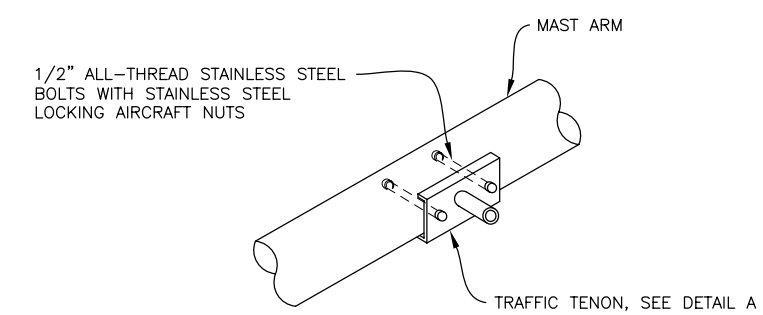

TYPICAL SIGNAL BLOCK INSTALLATION

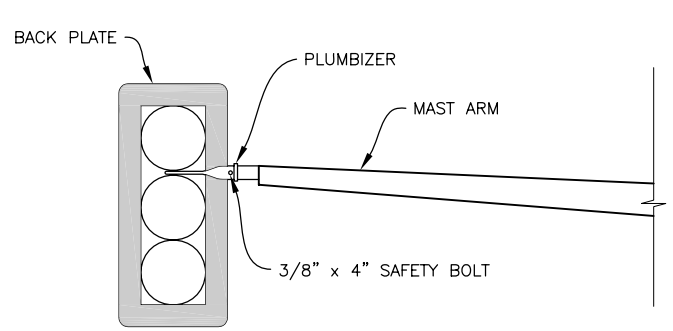

PLUMBIZER DETAIL

Public Works Department
Traffic Engineering Division
480 S. Allison Pkwy
Lakewood, Colorado
80226

City of Lakewood
Traffic Signal Standards

SIGNAL HEAD ATTACHMENTS

Date	Sheet Revisions	Approved:	File:
10/21/04	ORIGINAL	Director of Public Works	
		Approved:	Sheet No: 9
		City Traffic Engineer	

S:\ENG CITY STD\TRAFFIC STD 2011\04 STD-DET-SIGHEAD.DWG DEC. 16, 2011

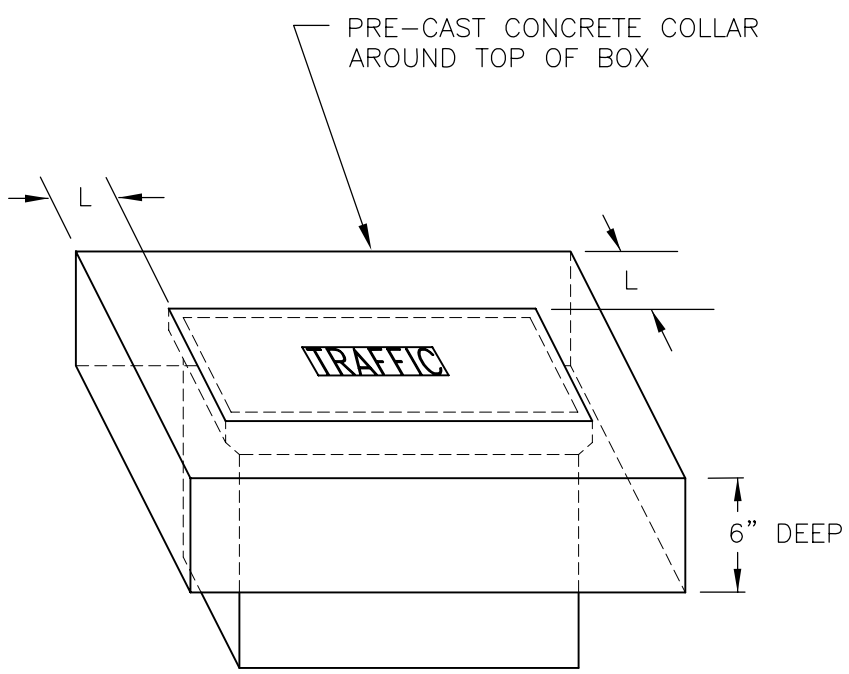

CONCRETE COLLAR

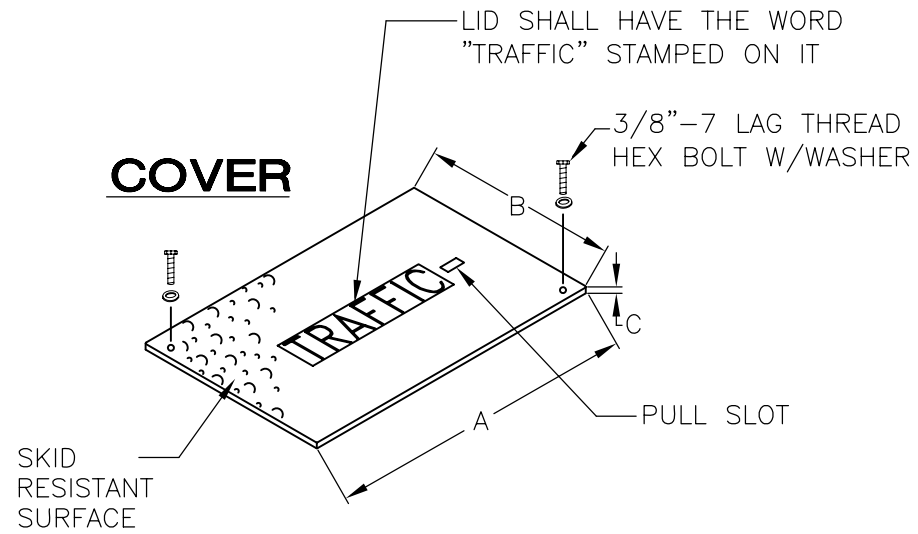

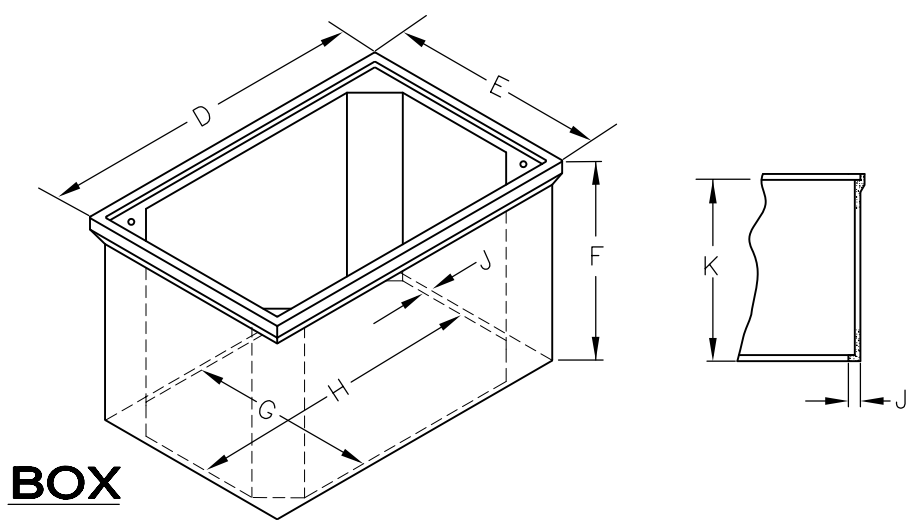

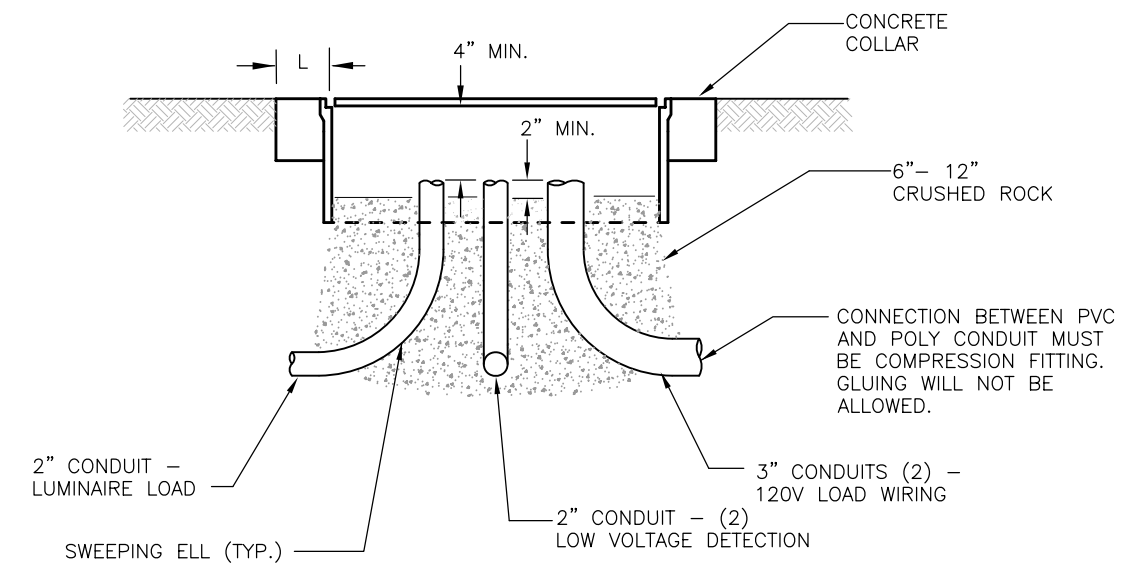

TYPICAL PULL BOX INSTALLATION

TYPICAL PULL BOX WITH PRE-CAST CONCRETE COLLAR

FIBERGLASS REINFORCED POLYMER CONCRETE DESIGNED FOR SERVICE
LOAD (MINIMUM) OF 20,000 LBS. OVER A 10" SQUARE

TABLE OF DIMENSIONS (MINIMUMS)

TYPE	DESCRIPTION	DIMENSIONS (IN.)										
		A	B	C	D	E	F	G	H	J	K	L
I A	LARGE 18x30 FOR CABINETS	31 1/4	18 1/4	3/4	33 1/8	20 1/8	12	16 3/8	29 3/8	1/2	11 1/4	12
I B	EXTRA LARGE 24x36 FOR CABINETS	35 5/8	24	3	37 5/8	26	18	22 1/4	33 7/8	1/2	15	12
I C	XXL 30x48 FIBER OPTIC	47 5/8	30 1/8	3	49 5/8	32 1/8	24	28 1/8	45 5/8	1/2	21	12
II	MEDIUM 12x18 FOR SIGNAL POLES	11 1/2	18 1/2	5/8	20 1/2	13 1/2	12	10 1/4	17 1/4	3/8	11 1/4	6
III	SMALL 12x12-FOR DETECTORS & ELECTRICAL SERVICE	12 7/8	12 7/8	5/8	14	14	12 3/4	10 1/2	10 1/2	1/4	12	6

PRECAST PULL BOX

Public Works Department
Traffic Engineering Division
480 S. Allison Pkwy
Lakewood, Colorado
80226

City of Lakewood
Traffic Signal Standards

PRECAST PULL BOX DETAILS

Date	Sheet Revisions	Approved:	File:
10/21/04	ORIGINAL	Director of Public Works	
		Approved:	Sheet No: 10
		City Traffic Engineer	

S:\ENG CITY STD\TRAFFIC STD 2011\10 STD-DET-PULL.DWG DEC. 27, 2011

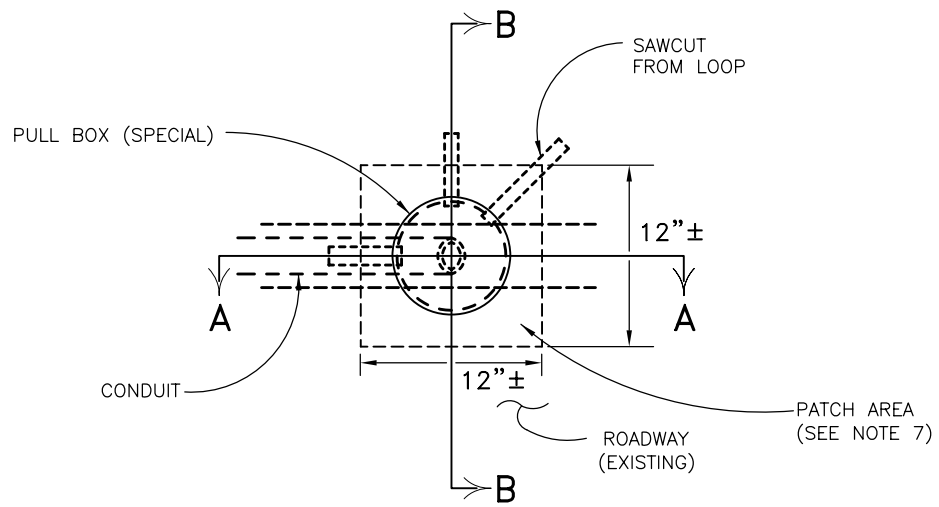

TOP VIEW

NOTES

1. PULL BOX (SPECIAL) SHALL BE A WATER VALVE STEM TYPE PULL BOX MADE OF CAST IRON OR CAST ALUMINUM. THE PULL BOX SHALL HAVE CAPABILITY OF ACCEPTING RISER RINGS FOR FUTURE OVERLAYS. THE LID SHALL HAVE THE WORD "TRAFFIC" PRINTED ON IT.
2. PULL BOX (SPECIAL) SHALL HAVE 3/4" TO 1" DIAMETER HOLES DRILLED FROM THE TOP TO ACCEPT LOOP WIRE. THE DRILLED HOLES SHALL HAVE RUBBER GROMMETS INSTALLED. THE NUMBER OF HOLES SHALL BE AS PER PLANS OR AS DIRECTED BY THE CITY.
3. 2' MINIMUM SLACK OF LOOP WIRES IS TO BE PROVIDED IN THE SIDE-OF-ROAD PULL BOX, SO THAT ALL TESTING CAN BE OUTSIDE OF THE PULL BOX. DETECTOR LEADS SHALL BE SPLICED IN SIDE-OF-ROAD PULL BOX, NOT IN PULL BOX (SPECIAL).
4. PULL BOX (SPECIAL) SHALL NOT BE LOCATED IN VEHICLE LANES, BUT SHALL BE TYPICALLY LOCATED ON A LANE LINE. FOR EDGE-OF-ROAD LOCATIONS, MAINTAIN A MINIMUM OF 12" FROM CONCRETE GUTTER PAN.
5. ALL WORK LISTED ABOVE FOR INSTALLATION OF PULL BOX (SPECIAL) SHALL NOT BE PAID FOR SEPARATELY, BUT SHALL BE INCLUDED IN THE PRICE OF THE CONDUIT.
6. PAVEMENT HOLE FOR PULL BOX SHALL BE EITHER CORE DRILLED TO FULL DEPTH, OR SAW CUT TO FULL DEPTH IN A 12"x12" SQUARE. FOR CORE DRILLING, PULL BOX (SPECIAL) SHALL BE GROUTED IN PLACE. FOR SAW CUT HOLES, THE HOLE SHALL BE FLOW FILLED OR FLASH FILLED AND SHALL MATCH THE EXISTING PAVEMENT MATERIAL DEPTH. MINIMUM ASPHALT DEPTH SHALL BE 9".

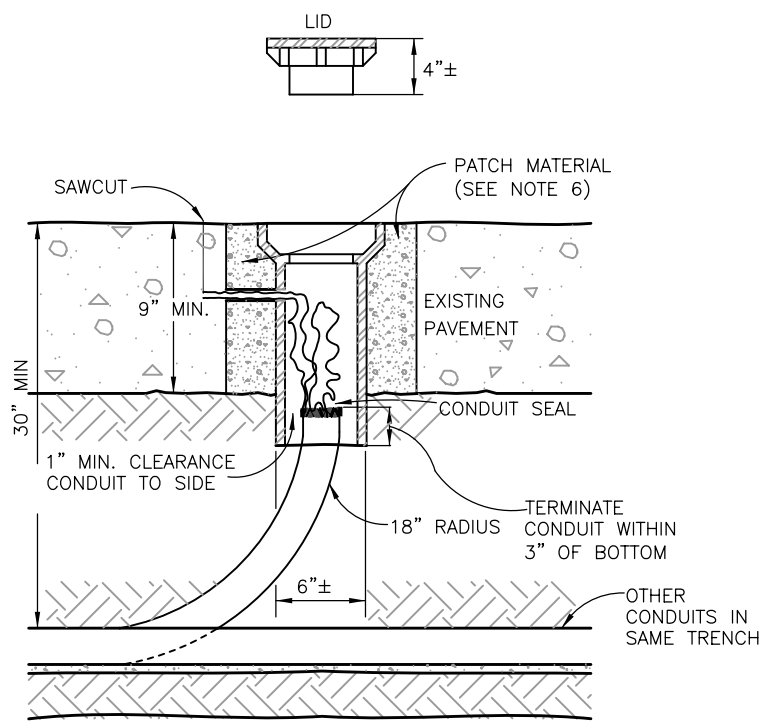

SECTION A-A

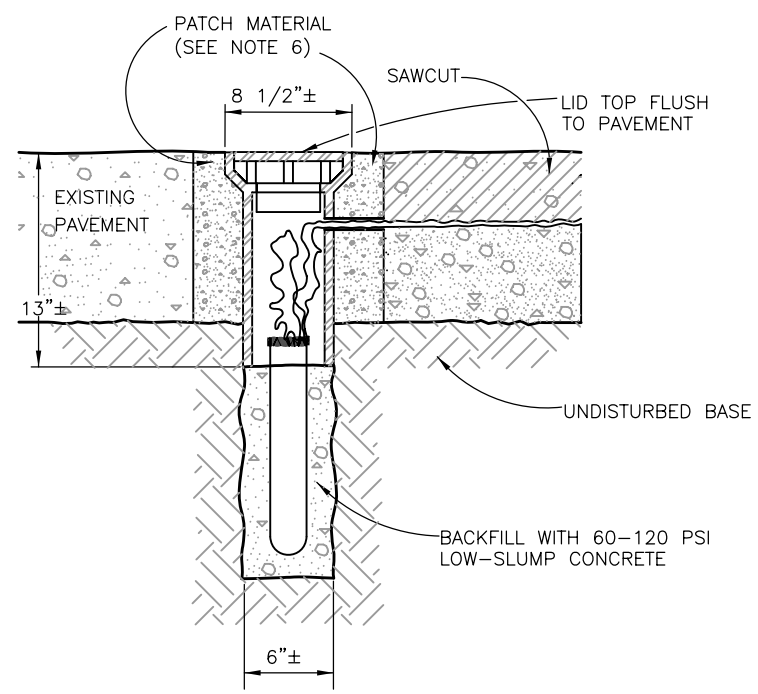

SECTION B-B

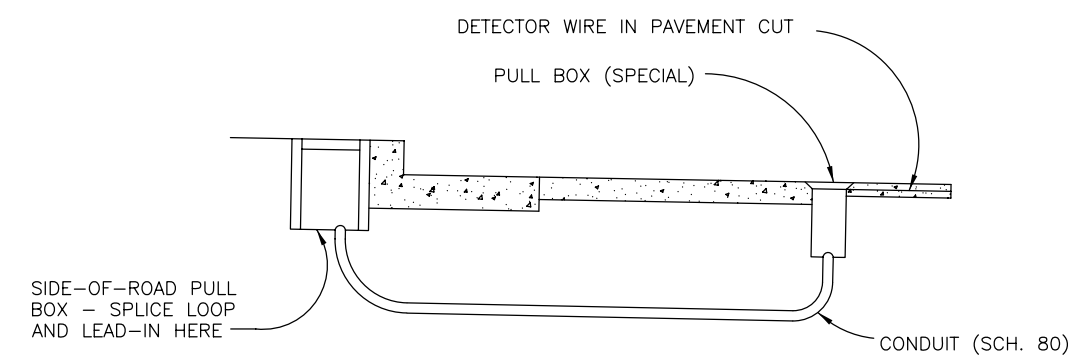

LOOP DETECTOR LEAD-IN

PULL BOX (SPECIAL)

Public Works Department
Traffic Engineering Division
480 S. Allison Pkwy
Lakewood, Colorado
80226

City of Lakewood
Traffic Signal Standards

PULL BOX (SPECIAL) DETAILS

Date	Sheet Revisions	Approved:	File:
		Director of Public Works	
10/21/04	ORIGINAL	Approved:	Sheet No: 11
		City Traffic Engineer	

S:\ENG CITY STD\TRAFFIC STD 2011\11 STD-PULL BOX(SPCL).DWG DEC. 16, 2011

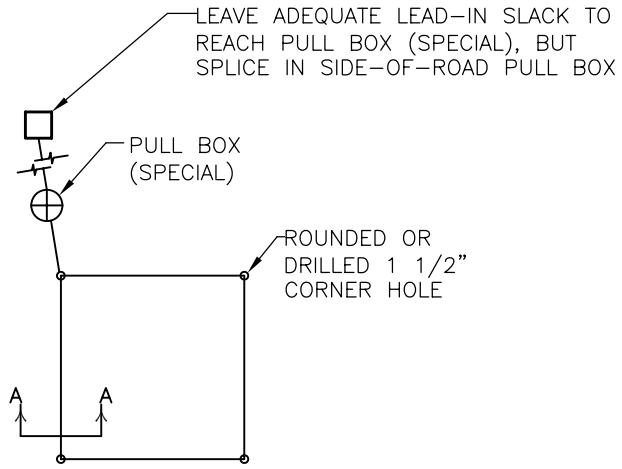

TYPICAL 6'x6' LOOP (3'-TURNS)

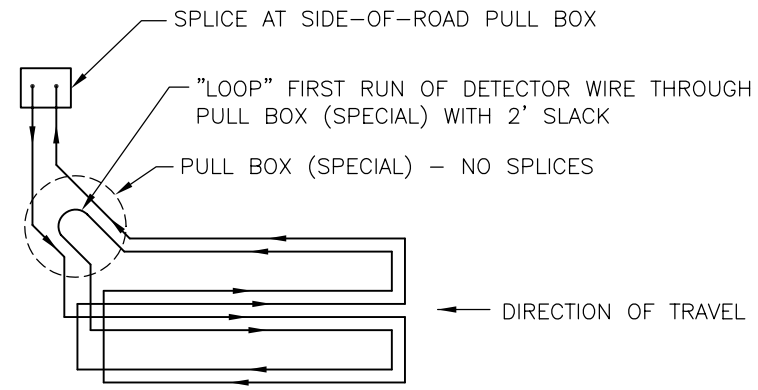

QUADRAPOLE WIRING

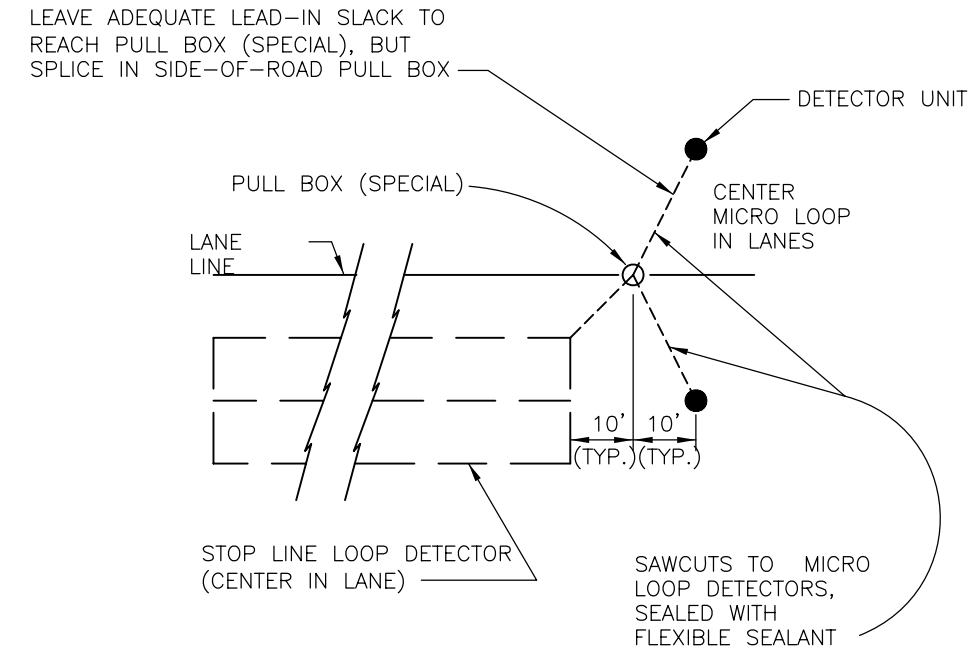

MICRO LOOP DETECTOR

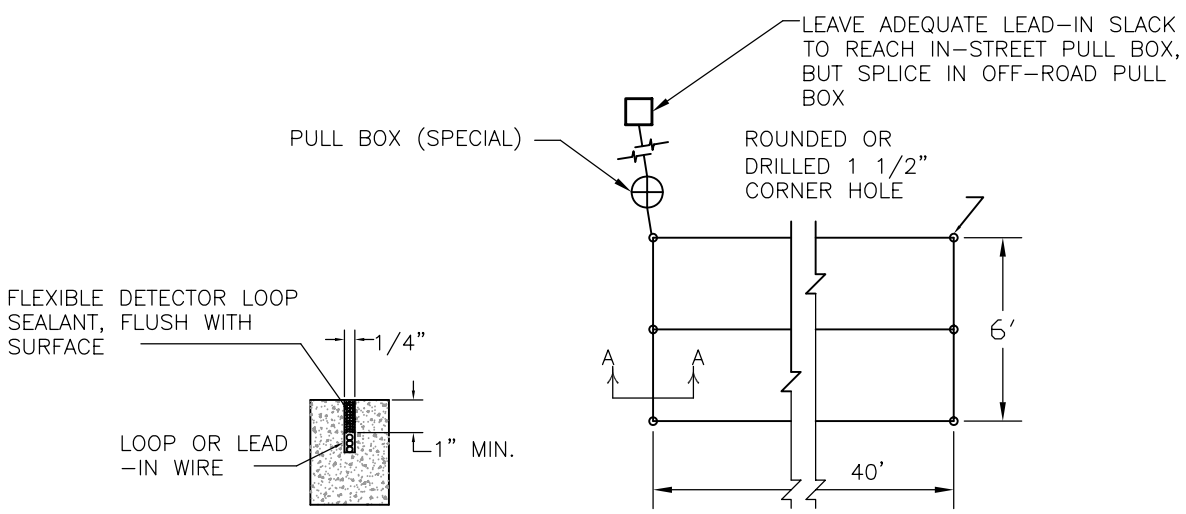

SECTION A-A

TYPICAL 6'x40' QUADRAPOLE LOOP

LOOP SAW CUT AND INSTALLATION

NOTES

1. ALL DETECTOR LOOPS SHALL BE #14 AWG THHN WIRE ENCASED IN PVC OR POLYETHYLENE TUBING.
2. IMMEDIATELY BEFORE LAYING THE LOOP CABLE, THOROUGHLY CLEAN AND DRY SAW CUT WITH HIGH PRESSURE OIL–FREE COMPRESSED AIR.
3. USE A BLUNT, NON–METALLIC INSTRUMENT TO PUSH WIRE INTO SLOT. DO NOT COIL LEAD WIRE.
4. LOOP WIRE SHALL BE CONTINUOUS (NO SPLICES) FROM THE SIDE–OF–STREET PULL BOX. SPLICES IN PULL BOX SHALL USE A WATERPROOF SPLICE KIT TO ASSURE THAT WATER DOES NOT INFILTRATE WIRE.
5. CONTINUITY TEST FOR EACH LOOP SHALL BE CONDUCTED:
   1) BEFORE ANY LOOP SEALANT IS INSTALLED AND
   2) AFTER LOOP SEALANT IS INSTALLED AND LEAD–IN CABLE IS SPLICED AND CONNECTED TO THE CONTROLLER.
   "RESISTANCE–TO–GROUND" AND "INDUCTANCE" SHALL BE MEASURED AND RECORDED FOR EACH TEST.
6. DETECTOR WIRE ACROSS BRIDGE JOINTS SHALL BE ENCASED IN A 12" SECTION OF 3/4" PVC PIPE THAT SPANS THE JOINT AREA.
7. WHERE AN ASPHALT OVERLAY IS PART OF THE WORK, ALL DETECTORS, LEAD–IN WIRE, AND CONDUIT SHALL BE IN PLACE BEFORE THE FINAL LIFT OF ASPHALT PAVEMENT IS APPLIED.

Public Works Department
Traffic Engineering Division
480 S. Allison Pkwy
Lakewood, Colorado
80226

City of Lakewood
Traffic Signal Standards

DETECTOR INSTALLATIONS

Date	Sheet Revisions	Approved: Director of Public Works	File:
		Approved: City Traffic Engineer	Sheet No: 12

S:\ENG CITY STD\TRAFFIC STD 2011\12 STD-DET-CONDUIT.DWG NOV. 17, 2011

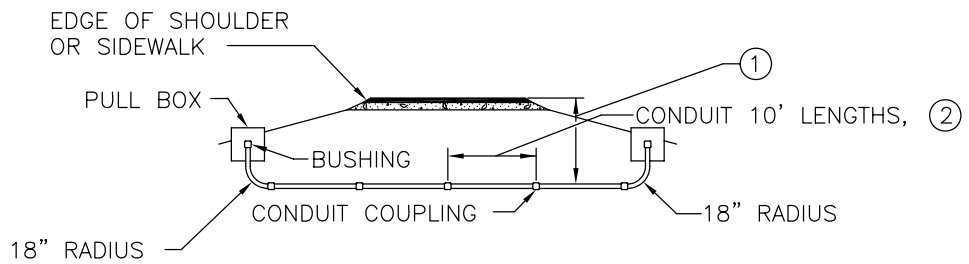

CONDUIT PLACEMENT UNDER PAVEMENT OR SIDEWALK

NOTES

① MINIMUM CONDUIT DEPTH: UNDER PAVEMENT 30" UNDER SIDEWALK 24"

② ALL PVC CONDUIT SHALL BE SCHEDULE 80

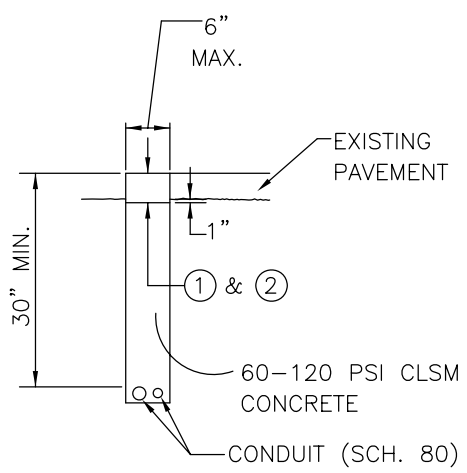

CONDUIT TRENCH DETAIL

NOTES

① HOT BITUMINOUS PAVEMENT (PATCHING) OR PORTLAND CEMENT CONCRETE PATCH, FULL DEPTH PLUS 1" (4" MIN). MATCH EXISTING PAVEMENT TYPE.

② FOR ASPHALT PATCH, 48 HOUR NOTICE TO THE ENGINEER REQUIRED PRIOR TO INSPECTION

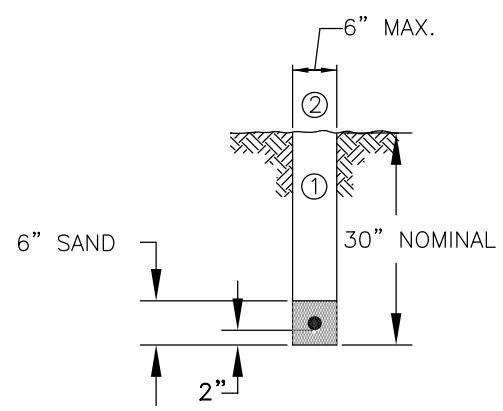

UNDER GRASS/GROUND TRENCHING DETAIL

NOTES

① BACKFILL AND TAMP WITH NATIVE MATERIAL TO MATCH COMPACTION OF SURROUNDING GROUND.

② RESEED OR RESOD SURFACE AT DIRECTION OF THE ENGINEER.

UNDERGROUND POWER SOURCE SCHEMATIC FOR SIGNALS WITH LUMINAIRES

(NO SCALE)

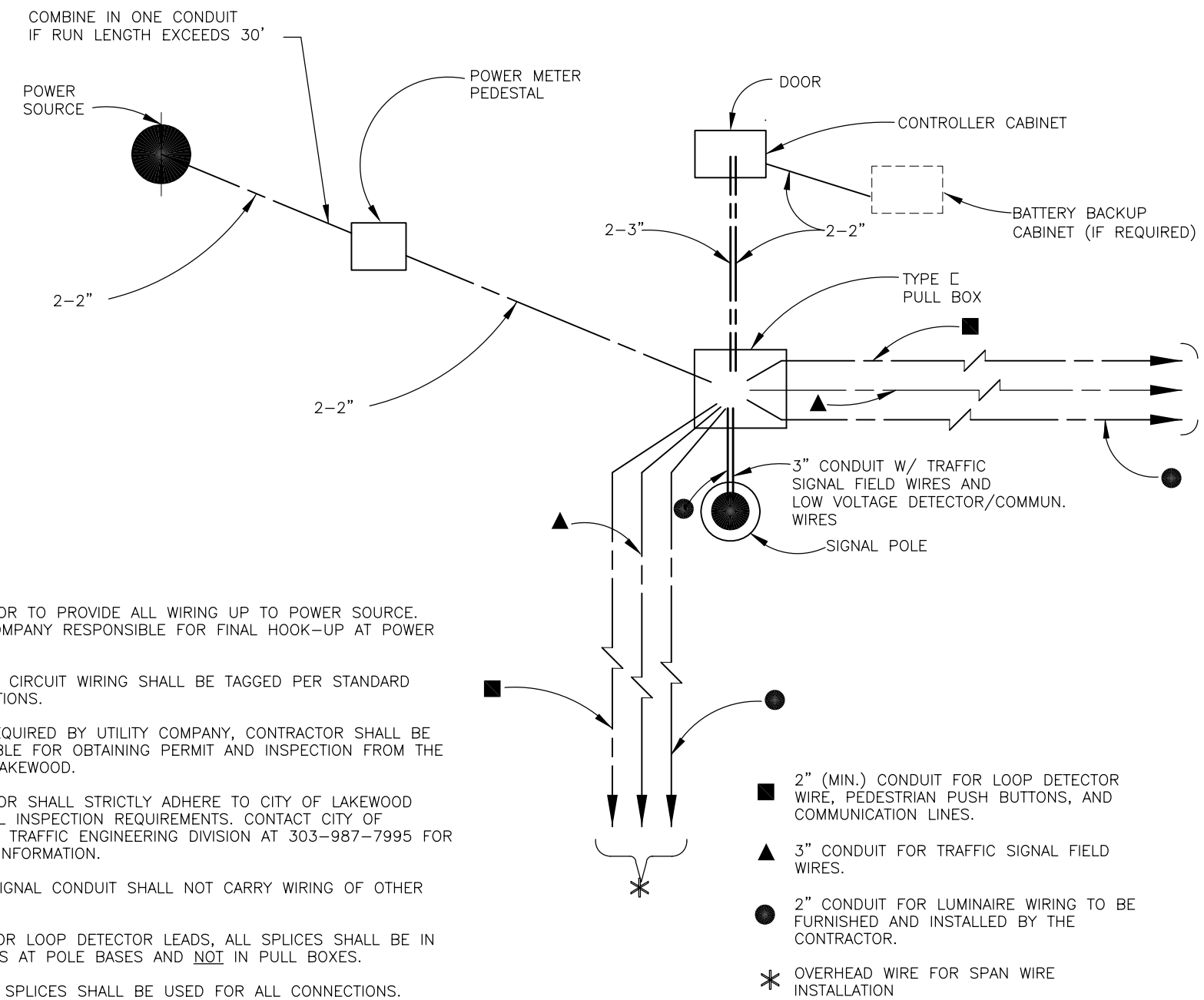

NOTES

1. CONTRACTOR TO PROVIDE ALL WIRING UP TO POWER SOURCE. UTILITY COMPANY RESPONSIBLE FOR FINAL HOOK–UP AT POWER SOURCE.
2. INDIVIDUAL CIRCUIT WIRING SHALL BE TAGGED PER STANDARD SPECIFICATIONS.
3. WHERE REQUIRED BY UTILITY COMPANY, CONTRACTOR SHALL BE RESPONSIBLE FOR OBTAINING PERMIT AND INSPECTION FROM THE CITY OF LAKEWOOD.
4. CONTRACTOR SHALL STRICTLY ADHERE TO CITY OF LAKEWOOD ELECTRICAL INSPECTION REQUIREMENTS. CONTACT CITY OF LAKEWOOD TRAFFIC ENGINEERING DIVISION AT 303–987–7995 FOR FURTHER INFORMATION.
5. TRAFFIC SIGNAL CONDUIT SHALL NOT CARRY WIRING OF OTHER UTILITIES.
6. EXCEPT FOR LOOP DETECTOR LEADS, ALL SPLICES SHALL BE IN HANDHOLES AT POLE BASES AND NOT IN PULL BOXES.
7. WIRE NUT SPLICES SHALL BE USED FOR ALL CONNECTIONS. SOLDERING AND CRIMPING WILL NOT BE ALLOWED.
8. CONTRACTOR SHALL PROVIDE 2 WIRING DIAGRAMS OF THE SIGNAL INSTALLATION TO THE CITY.
9. UNLESS ALLOWED BY THE ENGINEER, WIRE SHALL NOT OCCUPY MORE THAN 40% OF THE INSIDE AREA OF CONDUIT.

Public Works Department
Traffic Engineering Division
480 S. Allison Pkwy
Lakewood, Colorado
80226

City of Lakewood
Traffic Signal Standards

UNDERGROUND POWER SCHEMATIC AND CONDUIT DETAILS

Date	Sheet Revisions	Approved:	File:
10/21/04	ORIGINAL	Director of Public Works	
		Approved:	Sheet No: 13
		City Traffic Engineer	

S:\ENG CITY STD\TRAFFIC STD 2011\13 STD-DET-POWER.DWG FEB. 14, 2012

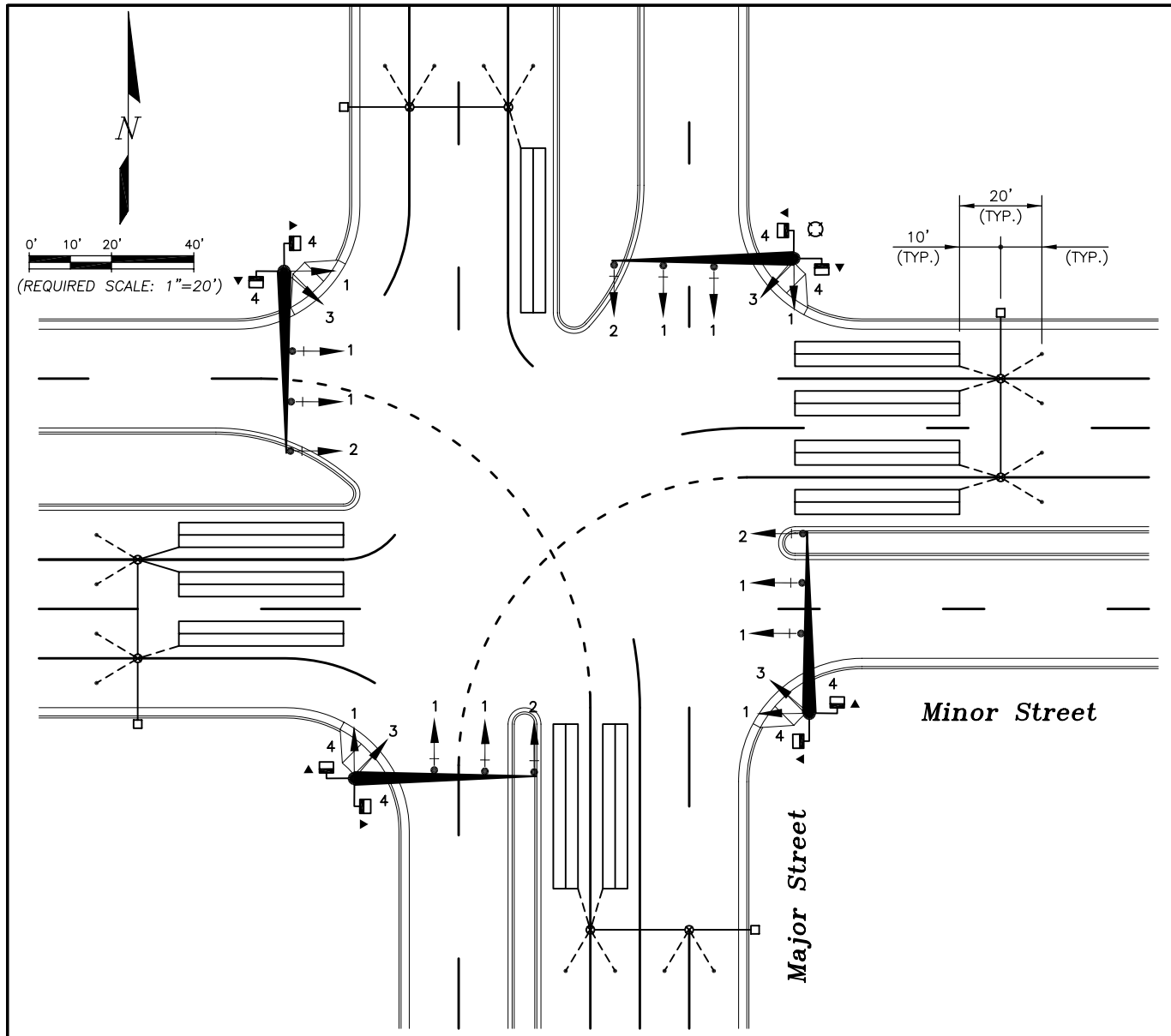

TYPICAL SIGNAL PLAN LAYOUT

(MODIFY TO SPECIFIC CONDITION)

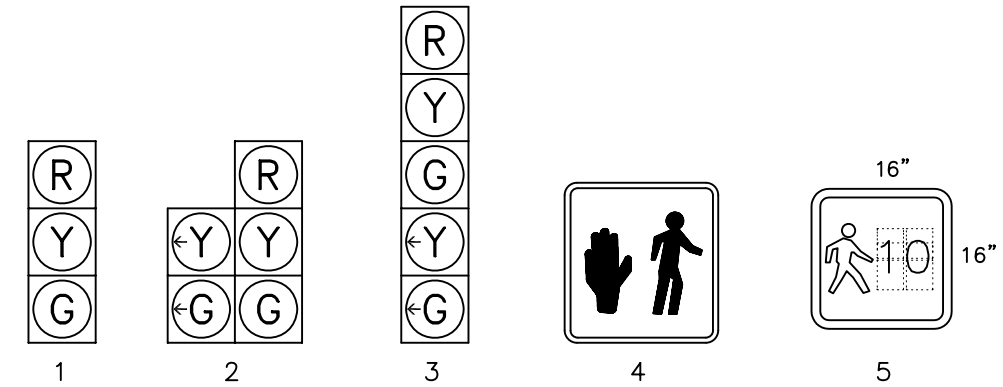

PEDESTRIAN AND VEHICLE SIGNAL HEADS

(MODIFY TO SPECIFIC CONDITION)

ALL VEHICLE HEADS SHALL MATCH CITY STANDARDS AND SPECIFICATIONS

LEGEND

(MODIFY TO SPECIFIC CONDITION)

- PEDESTRIAN PUSH BUTTON UNIT
- PEDESTRIAN SIGNAL HEAD
- LUMINAIRE (RELOCATED)
- LUMINAIRE
- TRAFFIC SIGNAL HEAD
- TRAFFIC SIGNAL HEAD W/ BP
- TRAFFIC SIGNAL HEAD WITH TURN ARROWS
- TRAFFIC SIGNAL CONTROLLER
- TRAFFIC SIGNAL POLE
- TRAFFIC SIGNAL POLE WITH MAST ARM
- TRAFFIC SIGNAL PEDESTAL POLE
- FIRE PREEMPTION UNIT
- TRAFFIC SIGN MOUNTED ON POLE/MAST ARM
- PULL BOX
- PULL BOX (SPECIAL)
- ELECTRICAL POWER PEDESTAL
- BATTERY BACKUP CABINET

R3-5L
30" x 36"

PROPOSED SIGNS

(MODIFY TO SPECIFIC CONDITION)

ITEM NO.	ITEM DESCRIPTION	UNIT	QUANTITY
202	REMOVAL OF TRAFFIC SIGNAL POLE	EACH	2
210	RESET LUMINAIRE	EACH	1
210	RESET TRAFFIC SIGNAL HEAD	EACH	4
210	RESET TRAFFIC SIGNAL CONTROLLER AND CABINET	EACH	1
210	RESET PEDESTRIAN PUSH BUTTON	EACH	4
210	RESET PEDESTRIAN SIGNAL HEAD	EACH	4
210	RELOCATE FIRE PREEMPTION DETECTION	EACH	1
613	2 INCH ELECTRICAL CONDUIT (PLASTIC)	LF	225
613	3 INCH ELECTRICAL CONDUIT (PLASTIC)	LF	125
614	TRAFFIC SIGNAL FACE (12-12)	EACH	2
614	TRAFFIC SIGNAL FACE (12-12-12)	EACH	10
614	LOOP DETECTOR WIRE	LF	1095
614	TRAFFIC SIGNAL-LIGHT POLE (1 MAST ARM)	EACH	4

TABULATION OF QUANTITIES

(MODIFY TO SPECIFIC CONDITION)

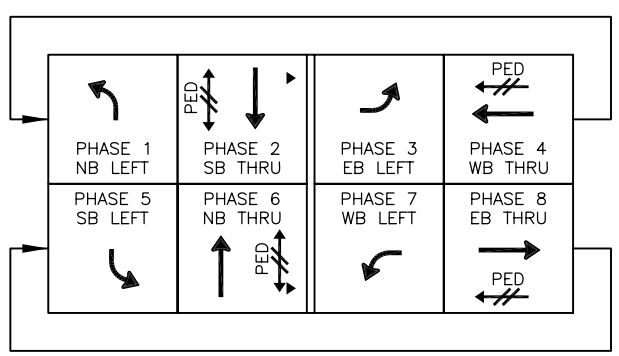

SIGNAL PHASING

(MODIFY TO SPECIFIC CONDITION)

(TYPICAL DUAL-RING EIGHT PHASE)

811 Know what's below Call before you dig.

Public Works Department
Traffic Engineering Division
480 S. Allison Pkwy
Lakewood, Colorado
80226

City of Lakewood
Traffic Signal Standards

TYPICAL TRAFFIC SIGNAL PLAN

Date	Sheet Revisions	Approved:	File:
10/21/04	ORIGINAL	Director of Public Works	
		Approved:	Sheet No:
		City Traffic Engineer	14

S:\ENG CITY STD\TRAFFIC STD 2011\14 STD-PLAN.DWG DEC. 14, 2011